STATE OF OHIO

DEPARTMENT OF TRANSPORTATION

CUY-IR490/SR010-2.09/19.28

CITY OF CLEVELAND

CUYAHOGA COUNTY

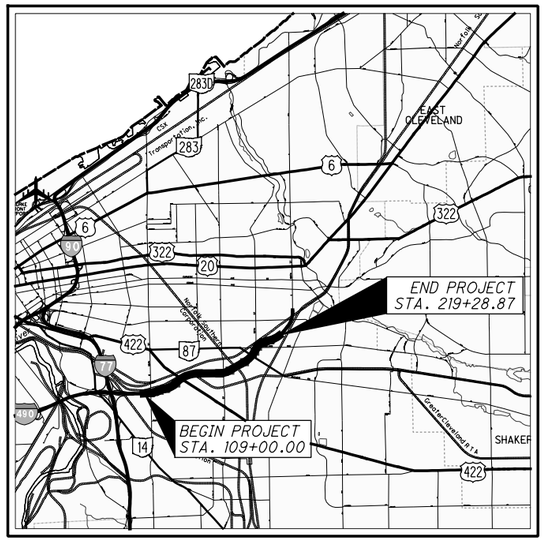

LOCATION MAP

LATITUDE: 41°29'08" LONGITUDE: 81°37'22"

SCALE IN MILES

0 1 2 3 4

N

PORTION TO BE IMPROVED
INTERSTATE HIGHWAY
FEDERAL ROUTES
STATE ROUTES
COUNTY & TOWNSHIP ROADS
OTHER ROADS

DESIGN DESIGNATION

CURRENT ADT (2017)	35,820
DESIGN YEAR ADT (2020)	48,230
DESIGN HOURLY VOLUME (2020)	3,580
DIRECTIONAL DISTRIBUTION	58%
TRUCKS (24 HOUR B&C)	6%
DESIGN SPEED	40 MPH
LEGAL SPEED	35 MPH
DESIGN FUNCTIONAL CLASSIFICATION	URBAN PRINCIPAL ARTERIAL
NHS PROJECT	NO

DESIGN EXCEPTIONS

NONE

UNDERGROUND UTILITIES

CONTACT BOTH SERVICES TWO WORKING DAYS **BEFORE YOU DIG.**

OHIO Utilities Protection SERVICE

Call Before You Dig
1-800-362-2764

(Non-members must be called directly)

OIL & GAS PRODUCERS
UNDERGROUND PROTECTION SERVICE
1-800-925-0988

The Kokosing Design-Build Team
Kokosing | Michael Baker | Richland Engineering | Brownstone Grey

ENGINEERS SEAL:

STATE OF OHIO
PETER ALAN NARSAVAGE
E-62277
REGISTERED
PROFESSIONAL ENGINEER

SIGNED: Peter Narsavage
DATE: 7/3/2019

ENGINEERS SEAL:

SIGNED:
DATE:

INDEX OF SHEETS:

SEE SHEET 2

BU-20
WALLS 4AB AND 4CD

PLAN PREPARED BY:

E.L. ROBINSON ENGINEERING
1468 West 9th Street • Cleveland, Ohio 44113
www.elrobinsonengineering.com

ODOT STANDARD CONSTRUCTION DRAWINGS			CITY OF CLEVELAND STANDARD CONSTRUCTION DRAWINGS		ODOT SUPPLEMENTAL SPECIFICATIONS	SPECIAL PROVISIONS
VPF-1-90 7/17/15					800 7/15/16	
					840 4/15/16	
					ODOT SUPPLEMENTS	
					1083 4/15/16	

PROJECT DESCRIPTION

THIS PROJECT CONSISTS OF THE CONSTRUCTION OF 2.09 MILES OF A NEW TWO- TO THREE-LANE BOULEVARD FROM E. 55TH ST. TO E. 93RD ST. WORK INCLUDES PAVEMENT, RAILROAD, STRUCTURES, DRAINAGE, WATERWORK, LIGHTING, POWER DISTRIBUTION, TRAFFIC CONTROL, LANDSCAPING, AND ADJUSTMENT OF EXISTING UTILITIES.

EARTH DISTURBED AREAS

PROJECT EARTH DISTURBED AREA:	87.2 ACRES
ESTIMATED CONTRACTOR EARTH DISTURBED AREA:	0 ACRES
NOTICE OF INTENT EARTH DISTURBED AREA:	87.2 ACRES

(AREA SERVICED BY COMBINED SEWER)

2016 SPECIFICATIONS

THE STANDARD SPECIFICATIONS OF THE STATE OF OHIO, DEPARTMENT OF TRANSPORTATION, INCLUDING CHANGES AND SUPPLEMENTAL SPECIFICATIONS LISTED IN THE PROPOSAL SHALL GOVERN THIS IMPROVEMENT.

NO.	DATE	DESCRIPTION
0	2019-06-20	RFC

ISSUE RECORD

FEDERAL PROJECT NO. E140 (249) RECORD PLANS

PID NO. 96833

CONSTRUCTION PROJECT NO. 17-3000

RAILROAD INVOLVEMENT
NORFOLK SOUTHERN
GCRTA
RECORD PLANS

CUY-IR490/SR010-2.09/19.28
RECORD PLANS

0
BU-20 - WALL 4AB & 4CD
...\BU-20\96833_GT020.dgn 7/5/2019 2:20:41 PM lschulte

ISSUE NO.	RECORD DATE	PAGE NO.	SHEET TITLE
0	2019-06-20	1	TITLE SHEET
3	2024-09-10	2	INDEX OF SHEETS
1	2024-09-10	3	WALL 4 GENERAL NOTES (SHEET 1 OF 2)
0	2019-06-20	4	WALL 4 GENERAL NOTES (SHEET 2 OF 2)
0	2019-06-20	5	WALL 4AB PLAN
0	2019-06-20	6	WALL 4AB ELEVATION
1	2024-09-10	7	WALL 4AB SCHEMATIC PLAN
1	2024-09-10	8	WALL 4AB TYPICAL SECTION
2	2020-09-09	9	WALL 4CD PLAN AND ELEVATION
2	2020-09-09	10	WALL 4CD SCHEMATIC PLAN
1	2024-09-10	11	WALL 4CD TYPICAL SECTION
0	2019-06-20	12	WALL 4 COPING DETAILS

ISSUE NO.	RECORD DATE	PAGE NO.	SHEET TITLE

NO.	DATE	DESCRIPTION
3	2024-09-10	RECORD DRAWINGS
2	2020-09-09	DC046
1	2020-06-08	DC040
0	2019-06-20	RFC

ISSUE RECORD

INDEX OF SHEETS

CUY-IR490/ SR010-2.09/19.28

RECORD PLANS

RECORD PLANS
RECORD PLANS

STANDARD DRAWINGS AND SUPPLEMENTAL SPECIFICATIONS:

REFER TO THE FOLLOWING STANDARD BRIDGE DRAWING:
VPF-1-90 REVISED 7/17/2015

REFER TO THE FOLLOWING SUPPLEMENTAL SPECIFICATION(S):
800 DATED 7/15/16
840 DATED 4/15/16

DESIGN SPECIFICATIONS:

THIS STRUCTURE CONFORMS TO THE "LRFD BRIDGE DESIGN SPECIFICATIONS", 7TH EDITION, ADOPTED BY THE AMERICAN ASSOCIATION OF STATE HIGHWAY AND TRANSPORTATION OFFICIALS, INCLUDING THE 2015 INTERIM REVISIONS AND THE ODOT BRIDGE DESIGN MANUAL, 2007 (DATED 07-15-16).

DESIGN DATA:

CONCRETE CLASS QC1 - COMPRESSIVE STRENGTH 4,000 PSI (CONCRETE COPING)
REINFORCING STEEL - ASTM A615 OR A996 GRADE 60, MINIMUM YIELD STRENGTH 60 KSI.
- ALL REINFORCING STEEL SHALL BE EPOXY COATED PER CMS 709.00

SOIL UNIT WEIGHT, γ= 120 pcf
ANGLE OF INTERNAL FRICTION, ϕ= 30°

MSE WALL DESIGN PARAMETERS

WALL	MIN. STRAP LENGTH, (%H)	BEGIN STA.	END STA.	WALL OR ABUTMENT	FACTORED BEARING RESISTANCE (KSF)
4AB	70%	10+41 (BEGIN WALL)	10+86	WALL	8.5
4AB	70%	10+86	11+36	ABUTMENT	6.6
4AB	70%	11+36	11+88	ABUTMENT	6.6
4AB	70%	11+88	12+27	WALL	8.5
4AB	70%	12+27	12+93	WALL	8.5
4AB	85%	12+93	13+59	ABUTMENT	5.1
4AB	85%	13+59	14+39 (END WALL)	WALL	6.0
4CD	70%	9+82 (BEGIN WALL)	10+22	WALL	7.1
4CD	70%	10+22	11+37	ABUTMENT	6.9
4CD	70%	11+37	12+33 (END WALL)	WALL	7.1

1

NOTE: THE MINIMUM SOIL REINFORCEMENT LENGTH IS AT LEAST 8 FEET OR THE PERCENTAGE OF THE WALL HEIGHT SHOWN ABOVE, WHICHEVER IS GREATER. FOR WALL SECTIONS DENOTED AS "ABUTMENTS, THE STRAP LENGTH WILL NEED TO BE 70% OF THE DISTANCE BETWEEN THE TOP OF THE LEVELING PAD AND THE TOP OF PAVEMENT.

ITEM 203 - ROADWAY MISC.: EPS GEOFOAM FILL

THIS WORK CONSISTS OF FURNISHING, TRIMMING AND PLACING BLOCK-MOLDED EXPANDED POLYSTYRENE (EPS) FOR USE AS A GEOFOAM GEOSYNTHETIC PRODUCT IN APPLICATIONS REQUIRING LIGHTWEIGHT FILL MATERIAL.

FURNISH EPS GEOFOAM BLOCKS PRODUCED BY A MANUFACTURER WITH A QUALITY CONTROL PROGRAM WHICH IS MONITORED AND CERTIFIED BY AN ACCREDITED, THIRD-PARTY TESTING ORGANIZATION. AT LEAST 20 DAYS BEFORE THE WORK IS TO BEGIN, SUBMIT TO THE ENGINEER THE FOLLOWING DOCUMENTS:

1. CERTIFIED TEST DATA SHOWING THE EPS GEOFOAM MEETS THE SPECIFIED REQUIREMENTS.
2. MANUFACTURER'S QUALITY CONTROL PLAN AND EVIDENCE OF THIRD-PARTY QUALITY CONTROL MONITORING.
3. SHOP DRAWINGS SHOWING BLOCK THICKNESS, WIDTH, LENGTH, AND LAYING PATTERN OR SCHEDULE.

FURNISH EPS GEOFOAM BLOCKS CONFORMING TO ASTM D 6817, RIGID CELLULAR POLYSTYRENE GEOFOAM, ACCORDING TO THE GEOFOAM TYPE INDICATED IN THE PLANS AND THE TABLE BELOW.

ASTM TYPE	EPS29
MINIMUM DENSITY, LB/CU.FT.	1.8
COMPRESSIVE RESISTANCE	
AT 1% STRAIN, PSI	10.9
AT 5% STRAIN, PSI	24.7
AT 10% STRAIN, PSI	29.0
FLEXURAL STRENGTH, PSI	50.0

FURNISH BLOCKS TREATED BY THE MANUFACTURER WITH A TESTED AND PROVEN TERMITE TREATMENT FOR BELOW GRADE APPLICATIONS. THE TREATMENT SHALL BE EPA REGISTERED, MEET REQUIREMENTS OF ICC ES AC239, AND BE RECOGNIZED IN AN ICC ES REPORT. FURNISH BLOCKS THAT MEET THE PRODUCT FLAMMABILITY REQUIREMENTS SPECIFIED IN ASTM C578.

FURNISH BLOCKS THAT ARE SMOOTH AND FLAT ON ALL SURFACES AND HAVE A DIMENSIONAL TOLERANCE OF ±0.5 PERCENT. THE CORNER OR EDGE FORMED BY ANY TWO FACES OF A BLOCK SHALL BE PERPENDICULAR. THE DEVIATION OF ANY FACE OF THE BLOCK FROM A THEORETICAL PERPENDICULAR PLANE SHALL NOT EXCEED 1/8 INCH OVER A DISTANCE OF 20 INCHES. ANY ONE FACE OF A BLOCK SHALL NOT DEVIATE FROM A THEORETICAL PLANE BY MORE THAN 1/4 INCH WHEN MEASURED USING A STRAIGHTEDGE WITH A LENGTH OF 10 FEET.

BEFORE SHIPPING TO THE SITE, ENSURE BLOCKS ARE SEASONED BY STORING THEM AT THE MANUFACTURER'S FACILITY FOR AT LEAST 72 HOURS AT NORMAL AMBIENT ROOM TEMPERATURE AFTER BEING RELEASED FROM THE MOLD. DURING SEASONING, ALLOW ADEQUATE SPACE BETWEEN THE BLOCKS TO ALLOW AIR CIRCULATION SO AS TO FOSTER THE OUTGASSING OF BLOWING AGENT AND TRAPPED CONDENSATE FROM WITHIN THE BLOCKS.

LABEL EACH BLOCK WITH THE MANUFACTURER'S NAME, ASTM EPS TYPE, THE DATE THE BLOCK WAS MOLDED, THE WEIGHT AND THE DENSITY OF THE BLOCK AS MEASURED AFTER SEASONING.

PROTECT THE BLOCKS FROM EXPOSURE TO THE FOLLOWING:

1. ORGANIC SOLVENTS SUCH AS ACETONE, BENZENE, AND PAINT THINNER
2. PETROLEUM BASED SOLVENTS SUCH AS GASOLINE AND DIESEL FUEL
3. HEAT SOURCES OR ACTIVITY THAT PRODUCES HEAT OR FLAME, INCLUDING TOBACCO SMOKING
4. MORE THAN 30 DAYS EXPOSURE TO SUNLIGHT

PROVIDE TIE DOWN STRAPS, SANDBAGS OR OTHER FLEXIBLE WEIGHTS TO PREVENT BLOCKS FROM BEING DISLODGED BY WIND. DO NOT STORE BLOCKS WHERE THERE IS A POTENTIAL FOR FLOODING.

PROTECT BLOCKS FROM DAMAGE. BLOCKS WITH SLIGHT DAMAGE WHICH AFFECTS A VOLUME OF 0.12 CUBIC FEET OR LESS MAY BE USED AS IS. BLOCKS WITH MODERATE DAMAGE WHICH AFFECTS A VOLUME OF 0.35 CUBIC FEET OR LESS MAY BE USED AND THE DAMAGED AREA FILLED WITH SAND. DO NOT USE BLOCKS WITH DAMAGE THAT AFFECTS A VOLUME GREATER THAN 0.35 CUBIC FEET. THE CONTRACTOR MAY CUT AND REMOVE THE DAMAGED PORTION OF A BLOCK AND THEN USE THE REMAINING UNDAMAGED PORTION OF THE BLOCK IF IT MEETS ALL OTHER REQUIREMENTS.

PREPARE THE SURFACE ON WHICH THE FIRST LAYER OF BLOCKS WILL BE PLACED BY STRIPPING ALL VEGETATION AND GRADING SO THAT IT IS LEVEL WITHIN A TOLERANCE OF 0.5 INCH OVER A 10 FT DISTANCE. PLACE GRANULAR MATERIAL CONFORMING TO SIZE NO. 9 IN TABLE 703.01 IN THE CM&S ON THE SURFACE TO FILL ANY LOW SPOTS IN THE SURFACE. ALSO USE NO. 9 SIZE GRANULAR MATERIAL TO FILL VOIDS BETWEEN THE SOIL AND SIDES OF THE BLOCKS. SELECT GRANULAR BACKFILL MAY BE USED IN LIEU OF NO. 9 SIZE GRANULAR MATERIAL.

PLACE BLOCKS AS INDICATED ON THE PLANS AND SHOP DRAWINGS. PLACE BLOCKS SO THAT ALL VERTICAL AND HORIZONTAL JOINTS BETWEEN BLOCKS ARE TIGHT. GAPS SHALL NOT EXCEED 1 INCH. AVOID CONTINUOUS VERTICAL JOINTS BY OFFSETTING AND ROTATING SUCCESSIVE LAYERS OF BLOCKS. OFFSET BLOCKS AT LEAST 2 FEET BETWEEN LAYERS. THE SURFACE OF EACH LAYER OF BLOCKS ON WHICH ANOTHER LAYER WILL BE PLACED MUST BE LEVEL TO WITHIN 0.5 INCH OVER A 10 FT DISTANCE. CONSTRUCT THE SURFACE OF THE UPPERMOST LAYER OF BLOCKS TO THE GRADE SHOWN ON THE PLANS TO A TOLERANCE OF ZERO TO MINUS 2.5 INCHES.

TRIM THE BLOCKS AS REQUIRED USING A SAW OR HOT WIRE.

PLACE CONNECTOR PLATES BETWEEN HORIZONTAL LAYERS OF BLOCKS. PLACE AT LEAST TWO CONNECTOR PLATES PER BLOCK. FURNISH CONNECTOR PLATES MANUFACTURED FROM GALVANIZED STEEL OR STAINLESS STEEL AND THAT ARE BARBED ON BOTH SIDES. EACH CONNECTOR PLATE SHALL HAVE A LATERAL HOLDING STRENGTH OF AT LEAST 60 LBS.

PORTIONS OF THE GEOFOAM FILL THAT ARE NOT BENEATH A CONCRETE DISTRIBUTION SLAB OR CONCRETE APPROACH SLAB MUST BE PROTECTED FROM HYDROCARBON SPILLS (E.G. DIESEL OR GASOLINE) BY COVERING THE GEOFOAM BLOCKS ON THE TOP AND SIDES FURNISH A GEOMEMBRANE MANUFACTURED FROM A TRI-POLYMER MATERIAL CONSISTING OF POLYVINYL CHLORIDE, ETHYLENE INTERPOLYMER ALLOY, AND A POLYURETHANE OR A COMPARABLE POLYMER COMBINATION. THE MATERIAL SHALL MEET THE FOLLOWING PHYSICAL AND CHEMICAL REQUIREMENTS.

- THICKNESS: MINIMUM 30 MILS (ASTM D751)
- UNLEADED GASOLINE VAPOR MAXIMUM TRANSMISSION RATE 0.40 OZ. PER SQUARE FOOT PER 24 HOURS (ASTM D814)
- GRAB TENSILE STRENGTH: MINIMUM 550 LBS BOTH MACHINE AND CROSS DIRECTION (ASTM D751)
- ELONGATION AT BREAK: 20% MINIMUM (ASTM D751)
- TOUGHNESS: MINIMUM 11,000 POUNDS (GRAB TENSILE STRENGTH MULTIPLIED BY PERCENT ELONGATION)
- PUNCTURE RESISTANCE: MINIMUM 750 LB (ASTM D751 BALL TIP)
- COLD CRACK: PASS AT -30° FAHRENHEIT (ASTM D2136 1-INCH MANDREL, 4 HOURS)
- FACTORY SEAMS: 2-INCH MINIMUM BONDED WIDTH SHEAR: MINIMUM 320 LB (ASTM D751)

PROVIDE CERTIFIED TEST DATA FROM THE MANUFACTURER THAT DEMONSTRATES THE GEOMEMBRANE MEETS THE ABOVE REQUIREMENTS. OVERLAP THE GEOMEMBRANE A MINIMUM OF 18 INCHES AT THE ENDS AND SIDES. PLACE THE BEGINNING OF EACH NEW ROLL BENEATH THE END OF THE PREVIOUS ROLL TO PREVENT THE ADVANCING FILL FROM LIFTING THE GEOMEMBRANE. STAGGER END OVERLAPS AT LEAST 5 FEET FROM THE OTHER END OVERLAPS IN ADJACENT ROLLS.

DO NOT DRIVE, OPERATE CONSTRUCTION EQUIPMENT, OR PLACE CONCENTRATED LOADS DIRECTLY ON THE BLOCKS. REMOVE AND REPLACE BLOCKS DAMAGED DUE TO THE CONTRACTOR'S OPERATIONS AT NO EXPENSE TO THE DEPARTMENT. PLACE AT LEAST 12 INCHES OF FILL OVER THE TOP OF THE BLOCKS BEFORE BEGINNING COMPACTION.

ITEM 512 - SEALING OF CONCRETE SURFACES (EPOXY-URETHANE)

SEAL SURFACES OF THE WALL PANELS AND COPING AS SHOWN IN THE PLANS WITH AN EPOXY-URETHANE SEALER ACCORDING TO C&MS 512. COLOR SHALL BE LIGHT TAN (FEDERAL STD. 595C #27769).

ITEM 512 - SEALING OF CONCRETE SURFACES, AS PER PLAN, PERMANENT GRAFFITI PROTECTION

APPLY A PERMANENT GRAFFITI COATING QUALIFIED ACCORDING TO SUPPLEMENT 1083 THAT IS COMPATIBLE WITH THE CONCRETE SEALER OVER WHICH IT IS APPLIED. PROVIDE A COATING THAT MEETS THE REQUIREMENTS LISTED BELOW. APPLY THE GRAFFITI COATING IN ACCORDANCE WITH THE MANUFACTURER'S PRINTED INSTRUCTIONS.

A. THE MATERIAL SHALL BE A SINGLE COMPONENT, RTV (ROOM TEMPERATURE VULCANIZED), NEUTRAL MOISTURE CURE, PERMANENT (NON-SACRIFICIAL), TYPE III (WATER CLEANABLE) POLYSILOXANE (SILICONE) ANTI-GRAFFITI COATING, FREE OF ANY WAXES, EPOXIES, OR POLYURETHANE COMPONENTS.

B. THE COATING SHALL BE A ONE COAT SYSTEM (NO PRIMER) CAPABLE OF BEING SPRAY APPLIED TO A DRY FILM THICKNESS OF 15 MILS (375 MICRONS) WITHOUT RUNS OR SAGS (MULTIPLE COAT APPLICATION ACCEPTABLE FOR BRUSH/ROLLER USAGE AND PRIMER USAGE ACCEPTABLE FOR SPECIALTY SUBSTRATES SUCH AS GALVANIZED METAL).

C. THE COATING SHALL EMIT LESS THAN 300 G/L (2.5 POUNDS PER GALLON) OF VOLATILE ORGANIZE COMPOUNDS (EPA METHOD 24).

D. THE COATING SHALL MEET THE FOLLOWING PERFORMANCE REQUIREMENTS:
   1. CLEANABILITY LEVEL 1 (GRAFFITI COMPLETELY REMOVED WITH COLD WATER POWER WASH) AS PER ASTM D7089 WITH LOW PRESSURE (1200 PSI) COLD WATER WASH AFTER 2000 HOURS ACCELERATED UV-CONDENSATION EXPOSURE IN ACCORDANCE WITH ASTM D4587.
   2. GRAFFITI RESISTANCE LESS THAN 7.5 AS PER ASTM D6578 AFTER 2000 HOURS ACCELERATED UV-CONDENSATION EXPOSURE IN ACCORDANCE WITH ASTM 4578.
   3. NO SIGNS OF GRAFFITI OR GRAFFITI STAINING AND MUST BE INTACT AND EXHIBIT NO SIGNS OF STREAKING, CRACKING, PINHOLING, DISCOLORING, OR OTHER VISIBLE COATING DEGRADATION UPON CASUAL OBSERVATION WHEN TESTED IN ACCORDANCE WITH TXDOT TEX 890-B, TYPE III METHOD.
   4. BREATHABILITY OF 10 PERMS (+/- 3) PER ASTM D1653 USING "WET CUP METHOD".
   5. ELONGATION AT BREAK GREATER THAN 100% AS PER ASTM D412 (USING DIE "D").
   6. ADHESION RATING OF "8 - DIFFICULT TO REMOVE" AS PER ASTM D6677 (ADHESION BY KNIFE).

PROPRIETARY RETAINING WALL DATA

THE PROPRIETARY WALL SUPPLIER SHALL DESIGN THE INTERNAL STABILITY OF A MECHANICALLY STABILIZED EARTH (MSE) WALL IN ACCORDANCE WITH SS840 TO RETAIN EARTH FILL AROUND AND BELOW THE ABUTMENTS. FOR LOADS AND NOTES PERTAINING TO THE ABUTMENTS, SEE THE GENERAL NOTES SHEETS FOR BU-19, BRIDGE NUMBER CUY-10-19.76L/CUY-10-19.78R.

ITEM 607 - VANDAL PROTECTION FENCE, 6' STRAIGHT, COATED FABRIC, AS PER PLAN:

INSTALL VANDAL PROTECTION FENCE ACCORDING TO STD. CONSTRUCTION DRAWING VPF-1-90 AND C&MS 607, EXCEPT AS MODIFIED BELOW.

POSTS, PLATES, TIE WIRES, CAULK AND ADDITIONAL VISIBLE HARDWARE SHALL BE COLOR BLACK (FEDERAL STD. 595C #17038). FENCE FABRIC SHALL BE BLACK VINYL-COATED, CHAIN LINK STYLE. FENCE POSTS SHALL BE INSTALLED BY EMBEDDING INTO CONRETE FOUNDATIONS WITH CORRUGATED TUBES USED BEHIND MSE WALL.

WHERE THE FENCE IS ADJACENT TO A RETAINING WALL, PLACE UNREINFORCED CONCRETE AT THE GROUND SURFACE ALONG THE FENCE LINE TO CONTROL WEEDS. PLACE THE UNREINFORCED CONCRETE 1'-0" WIDE AND 4" THICK.

NO.	DATE	DESCRIPTION
1	2024-09-10	RECORD DRAWINGS
0	2019-06-20	RFC

ISSUE RECORD

DESIGN AGENCY
E.L. ROBINSON ENGINEERING
1468 West 9th Street · Cleveland, Ohio 44113
www.elrobinsonengineering.com

DESIGNED	DRAWN	REVIEWED	DATE
LJS	FIB	RER	03/25/19
CHECKED	REVISED	STRUCTURE FILE NUMBER	
PAN			

RECORD PLANS

GENERAL NOTES (SHEET 1 OF 2)
WALLS 4AB/4CD
MSE WALL AND ABUTMENT FOR OH-10 EB/WB OVER GCRTA BLUE/GREEN LINES

RECORD PLANS

CUY-IR490/SR010-2.09/19.28
PID No. 96833

BU-20 - WALL 4AB & 4CD
...\Wall 4ABCD\96833_04_WN001.dgn 10/15/2024 10:56:17 AM Gregory.Hertler

ITEM 840 - 6" DRAIN PIPE (NON-PERFORATED), AS PER PLAN

IN ADDITION TO THE REQUIREMENTS OF SUPPLEMENT SPEC 840, THIS ITEM SHALL CONSIST OF SUPPLYING AND PLACING ROCK CHANNEL PROTECTION, TYPE C AND ANIMAL GUARD AT THE OUTLET OF THE DRAIN PIPE AS SHOWN IN THE DETAIL ON SHEETS 5/10 & 8/10.

ITEM 840 - MECHANICALLY STABILIZED EARTH WALL

AS AN ALTERNATE TO THE PIPE SLEEVES REQUIRED BY SUPPLEMENTAL SPECIFICATION 840.03.K, THE CONTRACTOR MAY ELECT TO UTILIZED THE YELLOW JACKET PILE SLEEVE SYSTEM MANUFACTURED BY FOUNDATION TECHNOLOGIES, INC.

PRE-CONSTRUCTION SURVEY, VIBRATION MONITORING, AND VIDEO INSPECTION OF SEWERS

CONDUCT A PRE-CONSTRUCTION SURVEY ACCORDING TO THE SETTLEMENT AND VIBRATION MONITORING PLAN OF BUILDINGS, STRUCTURES, UTILITIES, AND CRITICAL LOCATIONS WITHIN THE LIMITS DETERMINED BY THE DBT VIBRATION SPECIALIST. PERFORM A PRE-CONSTRUCTION VIDEO INSPECTION ACCORDING TO CM&S 611 OF ALL SEWERS WITHIN THE INFLUENCE ZONES OF CONSTRUCTION. PERFORM SETTLEMENT AND VIBRATION MONITORING ACCORDING TO THE SETTLEMENT AND VIBRATION MONITORING PLAN DURING CONSTRUCTION. AFTER CONSTRUCTION IS SUBSTANTIALLY COMPLETE, PERFORM A SECOND VIDEO INSPECTION OF THE SEWERS. PROVIDE RECORDINGS OF THE VIDEOS TO THE DEPARTMENT AND MAINTAINING AGENCY FOR REVIEW.

REGULATED MATERIALS

REFER TO DEMOLITION PLANS IN BUILDABLE UNIT 15 - ROADWAY AND PAVEMENT, KINGSBURY RUN TO END PROJECT FOR LOCATION AND IDENTIFICATION OF KNOWN REGULATED MATERIALS. HANDLING OF REGULATED MATERIALS SHALL BE IN ACCORDANCE WITH CONTRACT DOCUMENTS.

ITEM SPECIAL - SETTLEMENT PLATFORM

SETTLEMENT OF FOUNDATION SOILS BENEATH THE PROPOSED EMBANKMENT SHALL BE MONITORED USING SETTLEMENT PLATFORMS. SETTLEMENT PLATFORMS SHALL BE INSTALLED AT THE LOCATIONS SHOWN IN THE SCHEMATIC PLAN. THE SETTLE PLATFORMS SHALL BE INSTALLED AFTER PREPARING THE EXISTING GROUND FOR THE PROPOSED EMBANKMENT SHOWN IN THE BU-15 PLANS, UNLESS OTHERWISE DIRECTED BY THE GEOTECHNICAL ENGINEER. SETTLEMENT PLATFORMS SHALL BE INSTALLED IN ACCORDANCE WITH ODOT GEOTECHNICAL BULLETIN 4 "GUIDELINES FOR THE USE OF GEOTECHNICAL INSTRUMENTATION."

THE CONTRACTOR SHALL PROTECT SETTLEMENT PLATFORMS FROM CONSTRUCTION TRAFFIC/ACTIVITIES USING APPROPRIATE METHODS SUCH AS BARRICADES, CONES, ETC. PLATFORMS OR PIPES DAMAGED OR DISPLACED DURING CONSTRUCTION SHALL BE RESTORED TO THEIR PROPER CONDITION. ALL MODIFICATIONS OR REPAIRS TO THE PLATFORM (I.E. PIPE CUTOFF LENGTHS, SPLICE LENGTHS, ETC.) SHALL BE DOCUMENTED AND THE REPAIRED PLATFORM SHALL BE SURVEYED BEFORE AND AFTER THE REPAIRS TO DOCUMENT ANY CHANGE IN THE RISER PIPE ELEVATION AT THE CONTRACTOR'S EXPENSE.

BASELINE ELEVATIONS OF THE EXISTING GROUND AT THE SETTLEMENT PLATFORM LOCATION AND THE TOP OF THE RISER PIPE SHALL BE RECORDED IMMEDIATELY PRIOR TO COMMENCEMENT OF PROPOSED EMBANKMENT CONSTRUCTION.

SETTLEMENT READING CONSISTING OF TOP OF RISER PIPE ELEVATION AND TOP OF FILL ELEVATION ADJACENT TO RISER PIPE SHALL BE OBTAINED AND REPORTED TO THE GEOTECHNICAL ENGINEER WEEKLY DURING PROPOSED EMBANKMENT CONSTRUCTION. THE READINGS SHALL BE PLOTTED PRESENTING DEFORMATION AND FILL HEIGHT VERSUS TIME.

THE CONTRACTOR SHALL IDENTIFY, SET, AND MAINTAIN AN APPROPRIATE NUMBER OF FIXED BENCHMARKS, REFERENCE POINTS, ETC. TO FACILITATE THE SURVEYING OF THE SETTLEMENT PLATFORMS. ALL FIXED POINTS SHALL BE LOCATED 100 +/- FEET FROM TOE OF THE PROPOSED EMBANKMENT. (OUTSIDE OF THE AREA OF INFLUENCE OF CONSTRUCTION ACTIVITIES OR TO BE SUBJECT TO SETTLEMENT OF ANY MAGNITUDE).

CONSTRUCTION SEQUENCE

1. EXCAVATE TO THE ELEVATION OF THE MSE WALL LEVELING PAD.
2. DRIVE ABUTMENT PILES.
3. PLACE CONCRETE LEVELING PAD.
4. INSTALL MSE WALL UP TO BOTTOM OF FOOTING.
5. CONSTRUCT ABUTMENT FOOTING AFTER WAITING PERIOD (SEE BU-19 PLANS FOR DETAILS).
6. INSTALL GEOFOAM FILL (WALL 4AB ONLY) WHILE CONSTRUCTING REMAINING MSE WALL PORTIONS. COVER GEOFOAM IF IT WILL BE EXPOSED TO SUNLIGHT FOR MORE THAN 30 DAYS.

APPLICABLE ODOT CM&S SPECIFICATIONS

THE FOLLOWING WORK ITEMS SHALL BE CONSTRUCTED PER THE CM&S ITEMS LISTED BELOW.

ITEM NO.	ITEM DESCRIPTION
203	GRANULAR MATERIAL, TYPE B
512	SEALING OF CONCRETE SURFACES (EPOXY-URETHANE)
512	SEALING OF CONCRETE SURFACES, AS PER PLAN, PERMANENT GRAFFITI PROTECTION
607	VANDAL PROTECTION FENCE, 6' STRAIGHT, COATED FABRIC, AS PER PLAN
840	MECHANICALLY STABILIZED EARTH WALL, AS PER PLAN
840	WALL EXCAVATION
840	FOUNDATION PREPARATION
840	SELECT GRANULAR BACKFILL
840	NATURAL SOIL
840	6" DRAIN PIPE, PERFORATED
840	6" DRAIN PIPE, NON-PERFORATED, AS PER PLAN
840	CONCRETE COPING
840	ON-SITE ASSISTANCE
840	SGB INSPECTION AND COMPACT TESTING

SECTION/DETAIL/VIEW CALLOUTS

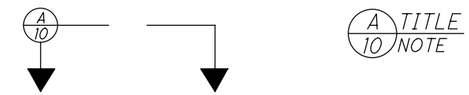

(SEE SECTION A ON SHEET 10) (SECTION A CUT FROM SHEET 10)

PLAN ABBREVIATIONS:

ABUT. = ABUTMENT
APPR. = APPROACH
B = BOTTOM
℄ = BASELINE
B.F. = BACK FACE
BM = BENCHMARK
BOT. OR BTM. = BOTTOM
℄ = CENTERLINE
C/C = CENTER TO CENTER
C.I.P. = CAST=IN=PLACE
C.J. = CONSTRUCTION JOINT
CLR. = CLEAR
CMS = CONSTRUCTION AND MATERIAL SPECIFICATIONS
CONC. = CONCRETE
CONST. = CONSTRUCTION
DIA. = DIAMETER
DIM. = DIMENSION
DTBD = DISPOSITION TO BE DETERMINED
DWG. = DRAWING
EB = EASTBOUND
E.F. = EACH FACE
EL. OR ELEV. = ELEVATION
EQ. = EQUAL
EST. = ESTIMATED
EX. = EXISTING
F.A. = FORWARD ABUTMENT
F/F = FACE TO FACE
F.F. = FRONT FACE
FT. = FOOT OR FEET
FTG. = FOOTING
FWD. = FORWARD
IN. = INCH
JT. = JOINT
LT. = LEFT
MAX. = MAXIMUM
MIN. = MINIMUM
MISC. = MISCELLANEOUS
N = NORTH
NB = NORTHBOUND
NO. = NUMBER
N.P.C.P.P. = NON-PERFORATED CORRUGATED PLASTIC PIPE
OHWM = ORDINARY HIGH WATER MARK
O/O = OUT TO OUT
P.C.P.P. = PERFORATED CORRUGATED PLASTIC PIPE
P.E.J.F. = PREFORMED EXPANSION JOINT FILLER
PROP. = PROPOSED
PSF = POUNDS PER SQUARE FOOT
R.A. = REAR ABUTMENT
S = SOUTH
SB = SOUTHBOUND
SER. = SERIES
SHLDR = SHOULDER
SPA. = SPACE OR SPACES
STA. = STATION
STD. = STANDARD
STR = STRAIGHT
T = TOP
T&B = TOP & BOTTOM
TBR = TO BE REMOVED
TBRBO = TO BE RELOCATED BY OTHERS
TEMP. = TEMPORARY
TYP. = TYPICAL
U.N.O. = UNLESS NOTED OTHERWISE
VAR. = VARIES
WB = WESTBOUND
WWR = WELDED WIRE REINFORCEMENT

NO.	DATE	DESCRIPTION
0	2019-06-20	RFC

ISSUE RECORD

DESIGN AGENCY
E.L. ROBINSON ENGINEERING
1468 West 9th Street - Cleveland, Ohio 44113
www.elrobinsonengineering.com

DESIGNED	DRAWN	REVIEWED	DATE
LJS	LJS	RER	03/25/19
CHECKED	REVISED	STRUCTURE FILE NUMBER	
PAN			

RECORD PLANS

GENERAL NOTES (SHEET 2 OF 2)
RETAINING WALLS 4AB/ACD
MSE WALL AND ABUTMENT FOR OH-10 EB/WB OVER GCRTA BLUE/GREEN LINES

RECORD PLANS

CUY-IR490/SR010-2.09/19.28
PID No. 96833

RECORD PLANS

0
BU-20 - WALL 4AB & 4CD
...\Wall 4ABCD\96833_04_WN002.dgn 7/5/2019 2:21:23 PM lschulte

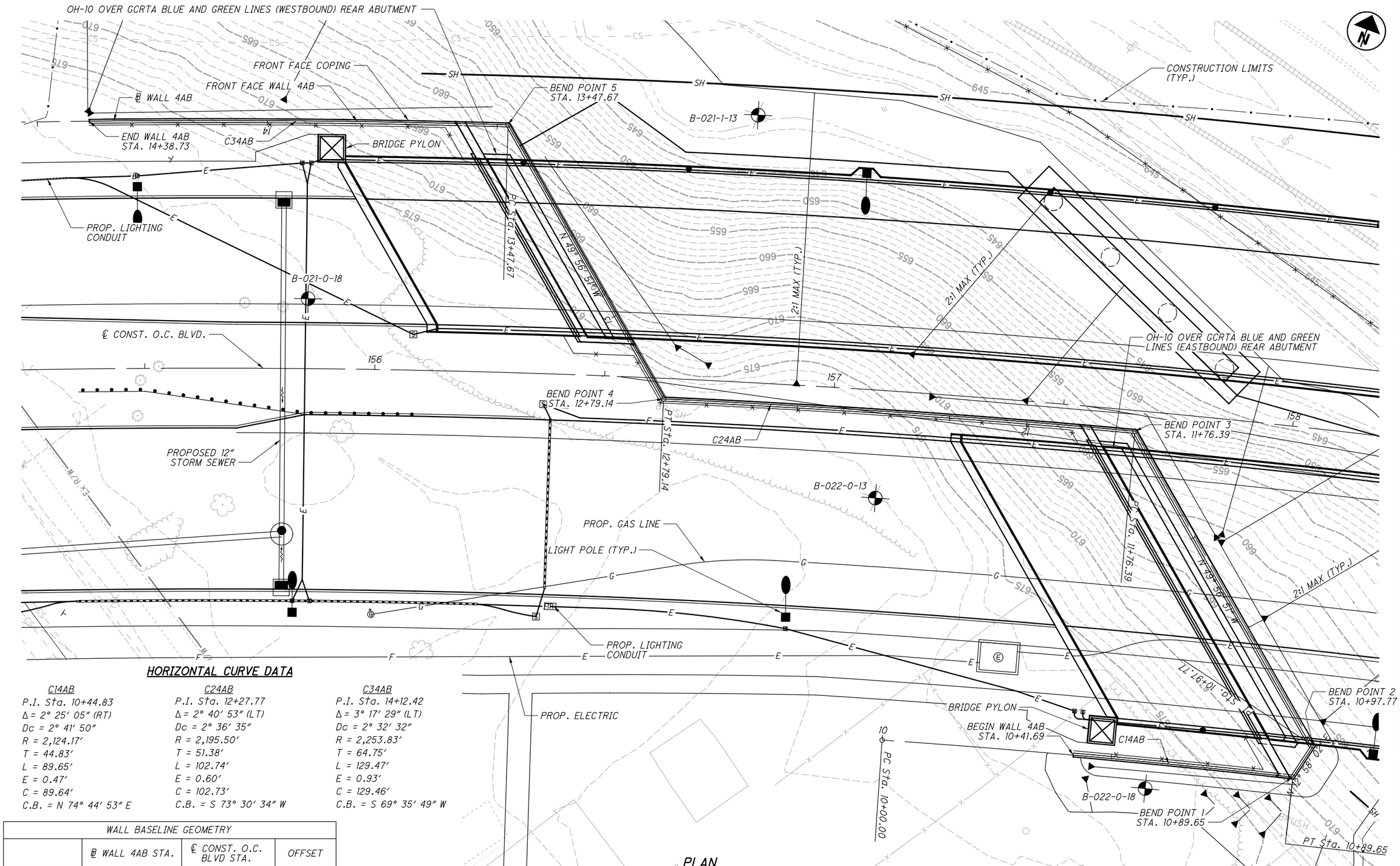

HORIZONTAL CURVE DATA

C14AB	C24AB	C34AB
P.I. Sta. 10+44.83	P.I. Sta. 12+27.77	P.I. Sta. 14+12.42
Δ = 2° 25′ 05″ (RT)	Δ = 2° 40′ 53″ (LT)	Δ = 3° 17′ 29″ (LT)
Dc = 2° 41′ 50″	Dc = 2° 36′ 35″	Dc = 2° 32′ 32″
R = 2,124.17′	R = 2,195.50′	R = 2,253.83′
T = 44.83′	T = 51.38′	T = 64.75′
L = 89.65′	L = 102.74′	L = 129.47′
E = 0.47′	E = 0.60′	E = 0.93′
C = 89.64′	C = 102.73′	C = 129.46′
C.B. = N 74° 44′ 53″ E	C.B. = S 73° 30′ 34″ W	C.B. = S 69° 35′ 49″ W

PLAN

WALL BASELINE GEOMETRY			
	℄ WALL 4AB STA.	℄ CONST. O.C. BLVD STA.	OFFSET
BEGIN WALL	10+41.69	157+58.72	75.83′ RT
BEND POINT 1	10+89.65	158+08.45	75.83′ RT
BEND POINT 2	10+97.77	158+12.26	68.59′ RT
BEND POINT 3	11+76.39	157+65.94	4.50′ RT
BEND POINT 4	12+79.14	156+62.99	4.50′ RT
BEND POINT 5	13+47.67	156+27.43	53.83′ LT
END WALL	14+38.73	155+38.54	53.83′ LT

BENCHMARK DATA

BM MN2 STA. 109+55.47 EL. 642.14
OFFSET 87.02′ RT.

BM MN3 STA. 158+90.59 EL. 668.04
OFFSET 266.47′ LT.

NOTES

EARTHWORK LIMITS SHOWN ARE APPROXIMATE. ACTUAL SLOPES SHALL CONFORM TO PLAN CROSS SECTIONS AND THE GRADING PLANS SHOWN IN BU-15.

LEGEND

BORING LOCATION

TBRBO - TO BE RELOCATED BY OTHERS

NO.	DATE	DESCRIPTION
0	2019-06-20	RFC

ISSUE RECORD

DESIGN AGENCY
E.L. ROBINSON ENGINEERING
1468 West 9th Street · Cleveland, Ohio 44113
www.elrobinsonengineering.com

DESIGNED	DRAWN	REVIEWED	DATE
LJS	DTA	RER	03/25/19
CHECKED	REVISED	STRUCTURE FILE NUMBER	
PAN			

RECORD PLANS

PLAN
RETAINING WALL 4AB
MSE WALL AND ABUTMENT FOR OH-10 EB/WB OVER GCRTA BLUE GREEN LINES

RECORD PLANS

CUY-IR490/SR010-2.09/19.28
PID No. 96833

3 / 10

5 / 12

BU-20 - WALL 4AB & 4CD
...\96833_04AB_WP001.dgn 5/19/2023 10:33:26 AM Gregory.Hertler

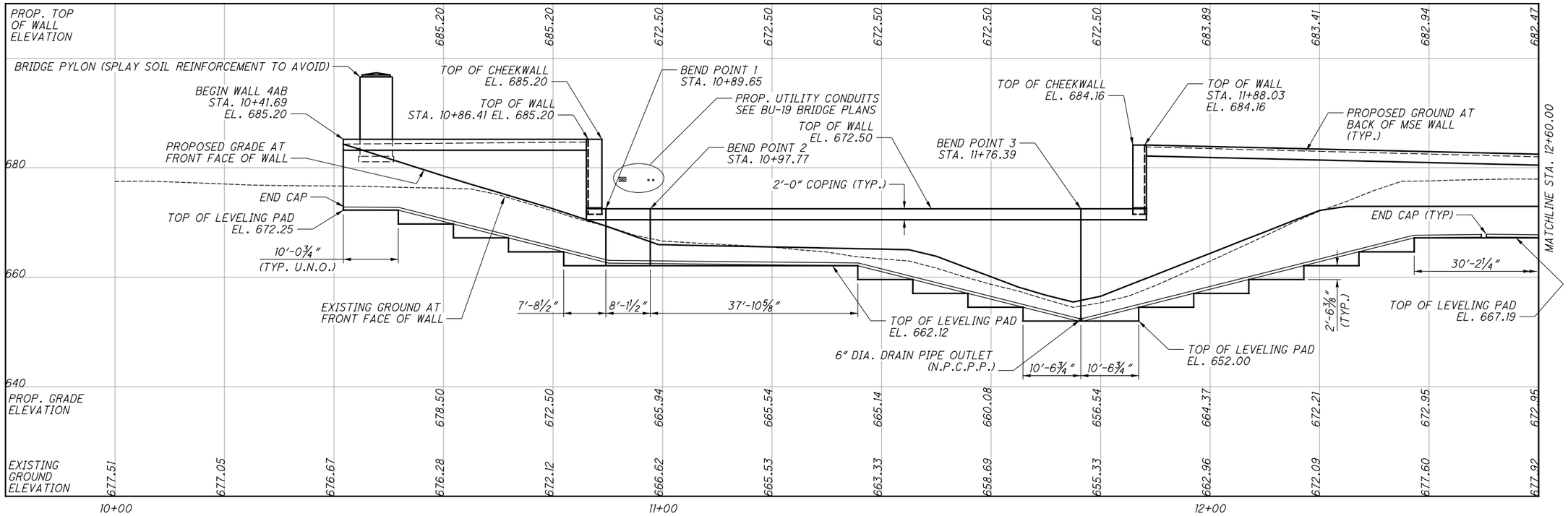

ELEVATION ALONG ℄ WALL 4AB

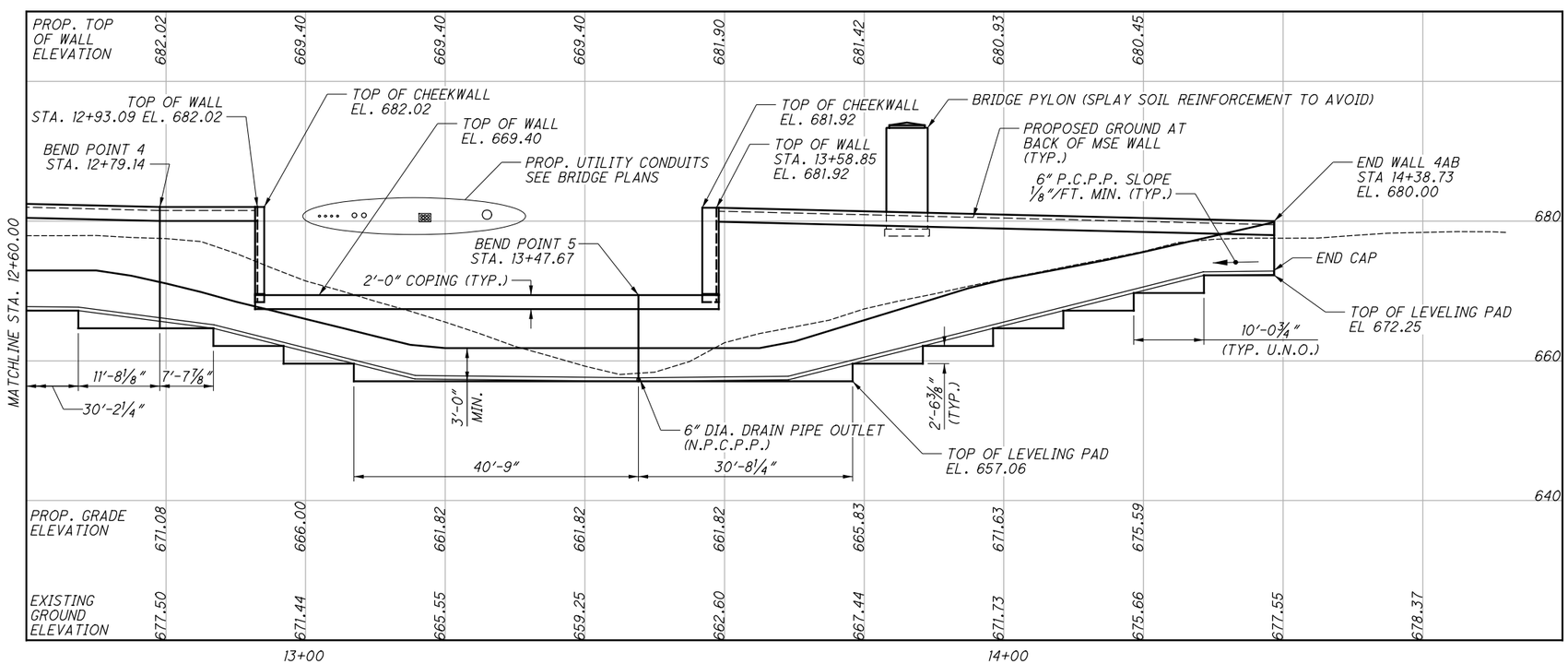

ELEVATION ALONG ℄ WALL 4AB

NO.	DATE	DESCRIPTION
0	2019-06-20	RFC

ISSUE RECORD

DESIGN AGENCY
E.L. ROBINSON ENGINEERING
1468 West 9th Street · Cleveland, Ohio 44113
www.elrobinsonengineering.com

DESIGNED	DRAWN	REVIEWED	DATE
LJS	DTA	RER	03/25/19
CHECKED	REVISED	STRUCTURE FILE NUMBER	
PAN			

RECORD PLANS

ELEVATION

RETAINING WALL 4AB

MSE WALL AND ABUTMENT FOR OH-10 EB/WB OVER GCRTA BLUE GREEN LINES

RECORD PLANS

CUY-IR490/SR010-2.09/19.28

PID No. 96833

RECORD PLANS

0
BU-20 - WALL 4AB & 4CD
...\96833_04AB_WP002.dgn 7/5/2019 2:21:59 PM lschulte

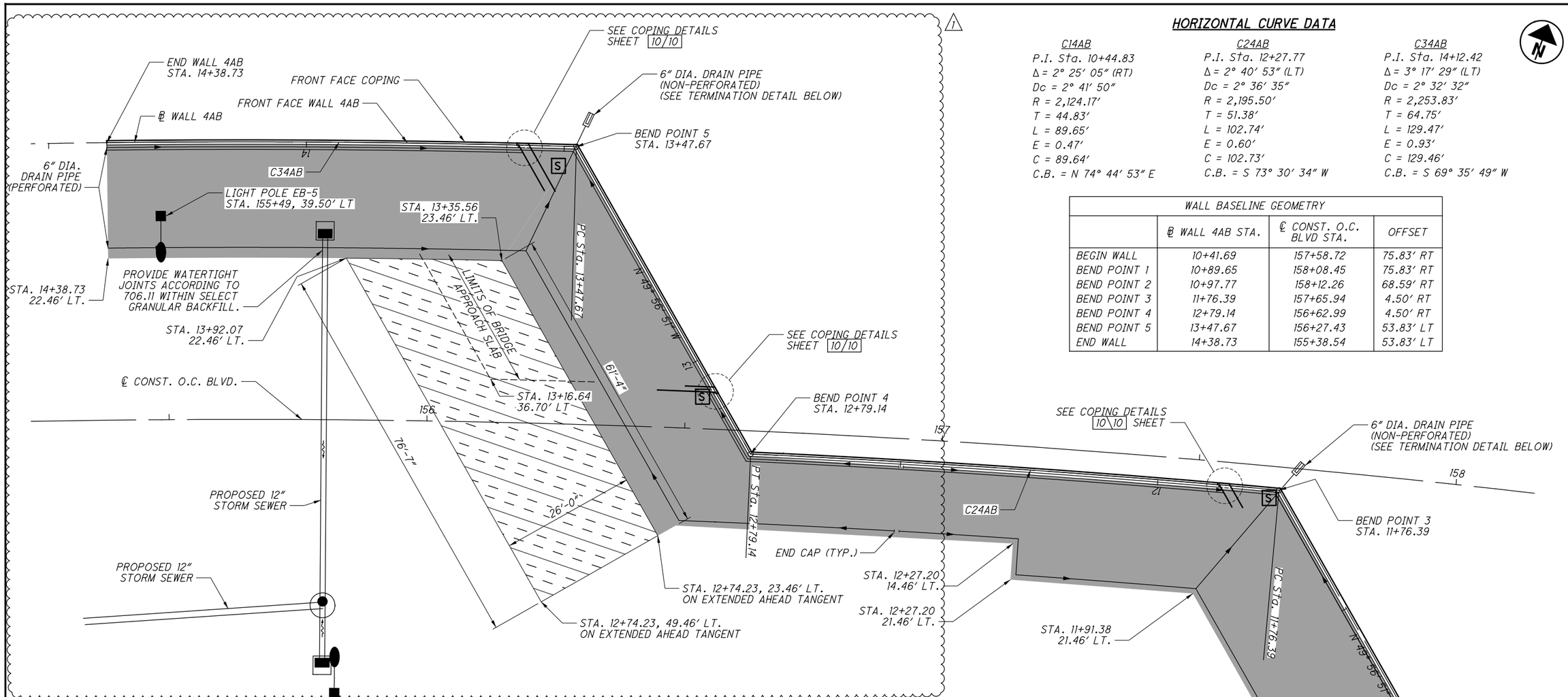

HORIZONTAL CURVE DATA

C14AB	C24AB	C34AB
P.I. Sta. 10+44.83	P.I. Sta. 12+27.77	P.I. Sta. 14+12.42
Δ = 2° 25′ 05″ (RT)	Δ = 2° 40′ 53″ (LT)	Δ = 3° 17′ 29″ (LT)
Dc = 2° 41′ 50″	Dc = 2° 36′ 35″	Dc = 2° 32′ 32″
R = 2,124.17′	R = 2,195.50′	R = 2,253.83′
T = 44.83′	T = 51.38′	T = 64.75′
L = 89.65′	L = 102.74′	L = 129.47′
E = 0.47′	E = 0.60′	E = 0.93′
C = 89.64′	C = 102.73′	C = 129.46′
C.B. = N 74° 44′ 53″ E	C.B. = S 73° 30′ 34″ W	C.B. = S 69° 35′ 49″ W

WALL BASELINE GEOMETRY

	℄ WALL 4AB STA.	℄ CONST. O.C. BLVD STA.	OFFSET
BEGIN WALL	10+41.69	157+58.72	75.83′ RT
BEND POINT 1	10+89.65	158+08.45	75.83′ RT
BEND POINT 2	10+97.77	158+12.26	68.59′ RT
BEND POINT 3	11+76.39	157+65.94	4.50′ RT
BEND POINT 4	12+79.14	156+62.99	4.50′ RT
BEND POINT 5	13+47.67	156+27.43	53.83′ LT
END WALL	14+38.73	155+38.54	53.83′ LT

LEGEND

- LIMITS OF SELECT GRANULAR BACKFILL
- LIMITS OF ITEM 203 - ROADWAY MISC.: EPS29 GEOFOAM FILL
- S - SETTLEMENT PLATFORMS

NOTES:

1. FOR MORE DETAILS ABOUT THE LOCATION OF THE SETTLEMENT PLATFORMS SEE THE GENERAL NOTES ON SHEET 2/10.

SETTLEMENT PLATFORM LOCATIONS

S	BRIDGE SUBSTRUCTURE	℄ CONST. O.C. BLVD STA.	OFFSET
SP-1	WB R.A.	156+24	50′ LT
SP-2	WB R.A.	156+53	8′ LT
SP-3	EB R.A.	157+64	6′ RT
SP-4	EB R.A.	158+10	68′ RT

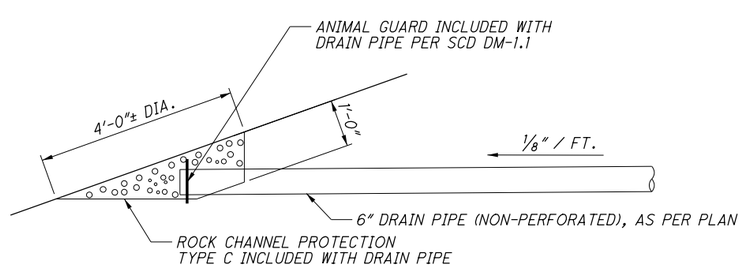

TERMINATION OF 6" DRAIN PIPE DETAIL, AS PER PLAN

NO.	DATE	DESCRIPTION
1	2024-09-10	RECORD DRAWINGS
0	2019-06-20	RFC

ISSUE RECORD

DESIGN AGENCY
E.L. ROBINSON ENGINEERING
1468 West 9th Street · Cleveland, Ohio 44113
www.elrobinsonengineering.com

DESIGNED	DRAWN	REVIEWED	DATE
LJS	FIB	RER	03/25/19
CHECKED	REVISED	STRUCTURE FILE NUMBER	
PAN			

RECORD PLANS

SCHEMATIC PLAN
RETAINING WALL 4AB
MSE WALL AND ABUTMENT FOR OH-10 EB/WB OVER GCRTA BLUE GREEN LINES

RECORD PLANS

CUY-IR490/SR010-2.09/19.28
PID No. 96833

5/10

7/12

BU-20 - WALL 4AB & 4CD
...\96833_04AB_WB001.dgn 10/15/2024 10:57:02 AM Gregory.Hertler

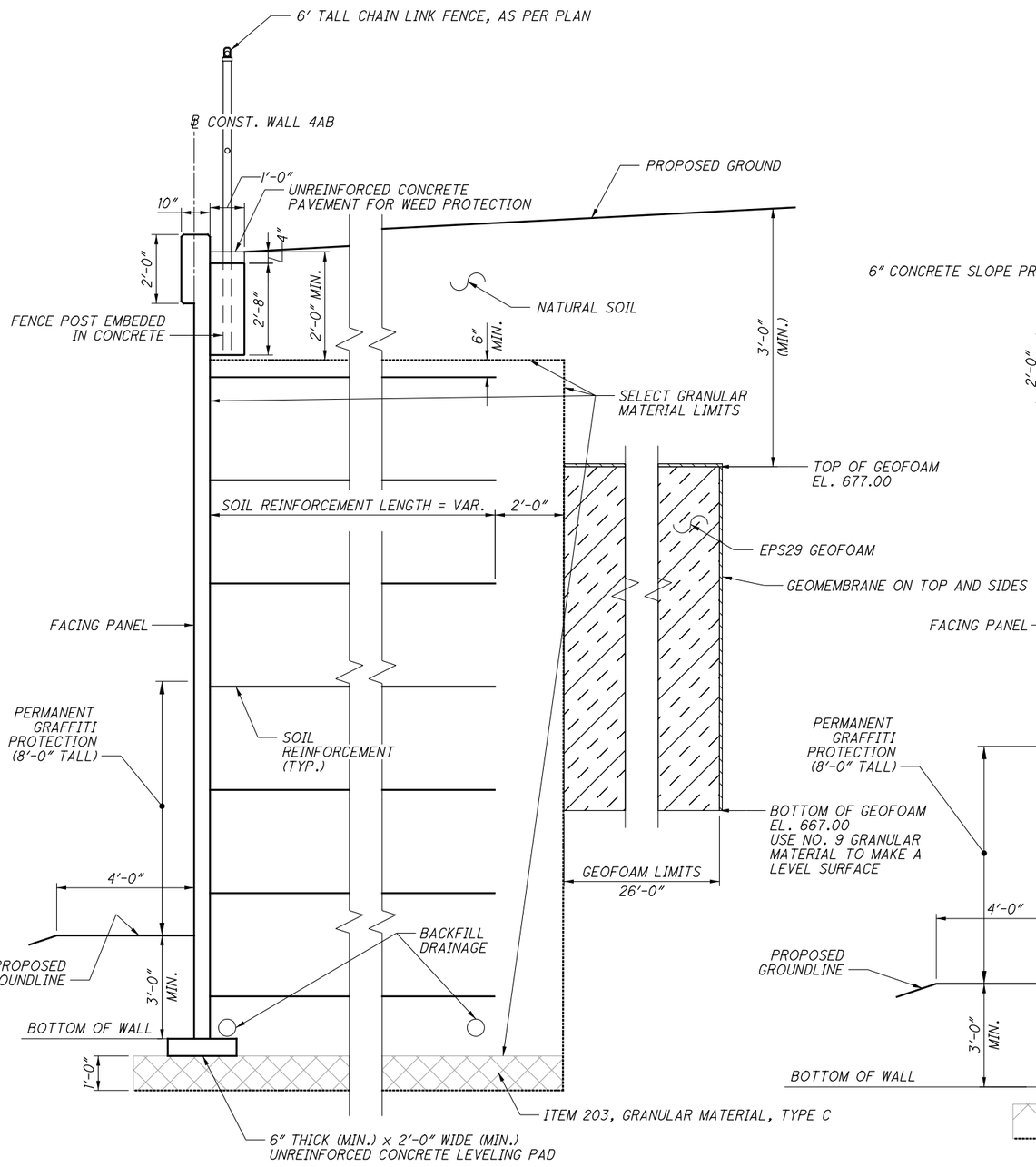

MSE WALL SECTION

(GEOFOAM ON WESTBOUND SIDE ONLY)

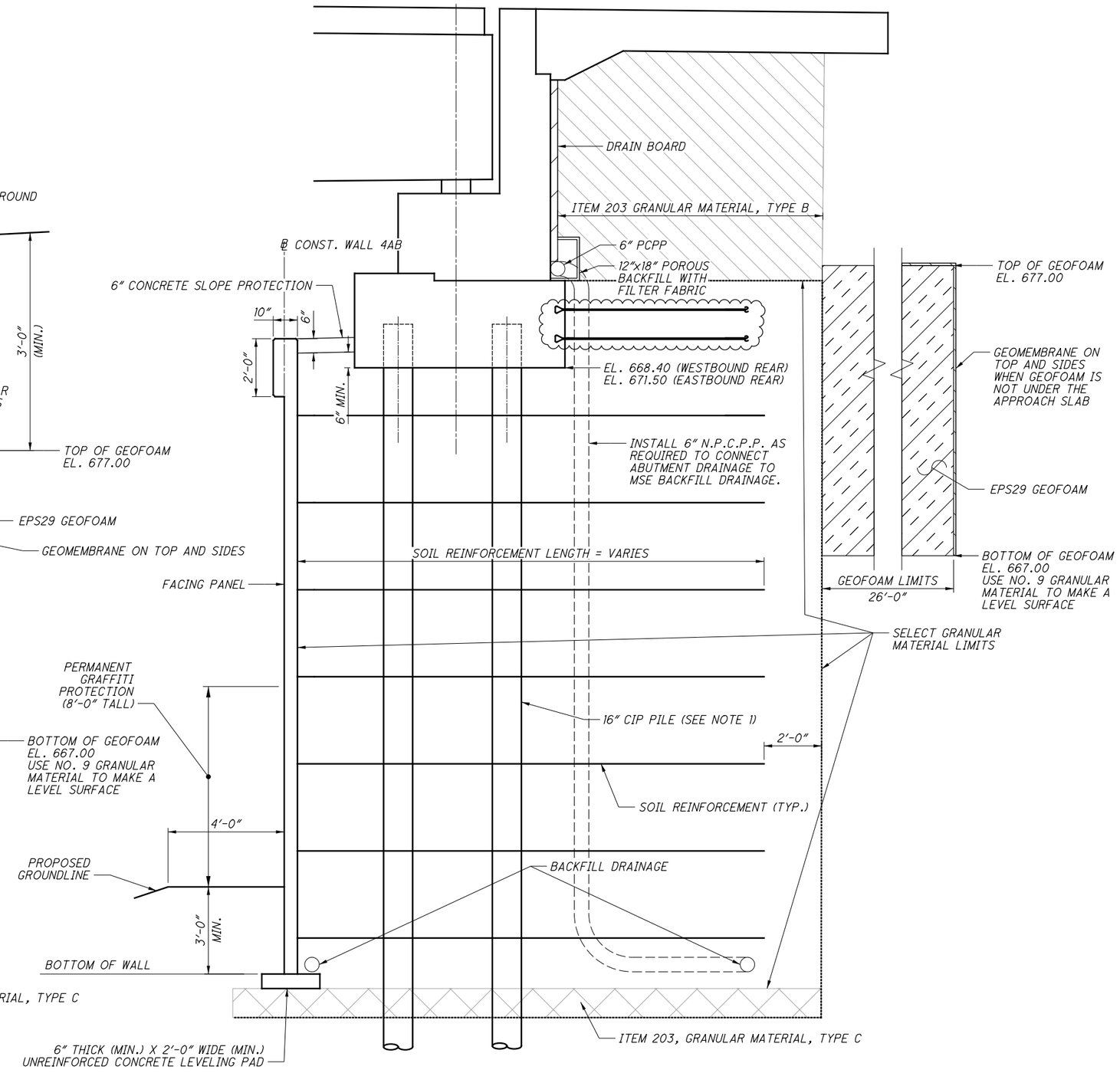

MSE ABUTMENT SECTION

(GEOFOAM ON WESTBOUND SIDE ONLY)

LEGEND

- LIMITS OF ITEM 203 - ROADWAY MISC.: EPS GEOFOAM FILL

NOTES

1. CONTRACTOR MAY UTILIZE THE YELLOW JACKET PILE SLEEVE SYSTEM MANUFACTURED BY FOUNDATION TECHNOLOGIES, INC.

NO.	DATE	DESCRIPTION
1	2024-09-10	RECORD DRAWINGS
0	2019-06-20	RFC

ISSUE RECORD

DESIGN AGENCY
E.L. ROBINSON ENGINEERING
1468 West 9th Street · Cleveland, Ohio 44113
www.elrobinsonengineering.com

DESIGNED	DRAWN	REVIEWED	DATE
LJS	LJS	RER	03/25/19
CHECKED	REVISED	STRUCTURE FILE NUMBER	
PAN			

RECORD PLANS

TYPICAL SECTION
WALLS 4AB
MSE WALL AND ABUTMENT FOR OH-10 EB/WB OVER GCRTA BLUE/GREEN LINES

RECORD PLANS

CUY-IR490/SR010-2.09/19.28
PID No. 96833

RECORD PLANS

6 / 10

8 / 12

BU-20 - WALL 4AB & 4CD
...\96833_04AB_WY001.dgn 9/3/2025 11:22:07 AM Gregory.Hertler

WALL BASELINE GEOMETRY			
	℄ WALL 4CD STA.	℄ CONST. O.C. BLVD STA.	OFFSET
BEGIN WALL	9+81.90	160+82.23	5.73' LT
BEND POINT 1	10+22.23	161+20.46	7.16' RT
BEND POINT 2	11+21.72	161+93.85	75.83' RT
END WALL	12+32.90	163+09.00	75.83' RT

BENCHMARK DATA
BM MN2 STA. 109+55.47 EL. 642.14 OFFSET 87.02' RT.
BM MN3 STA. 158+90.59 EL. 668.04 OFFSET 266.47' LT.

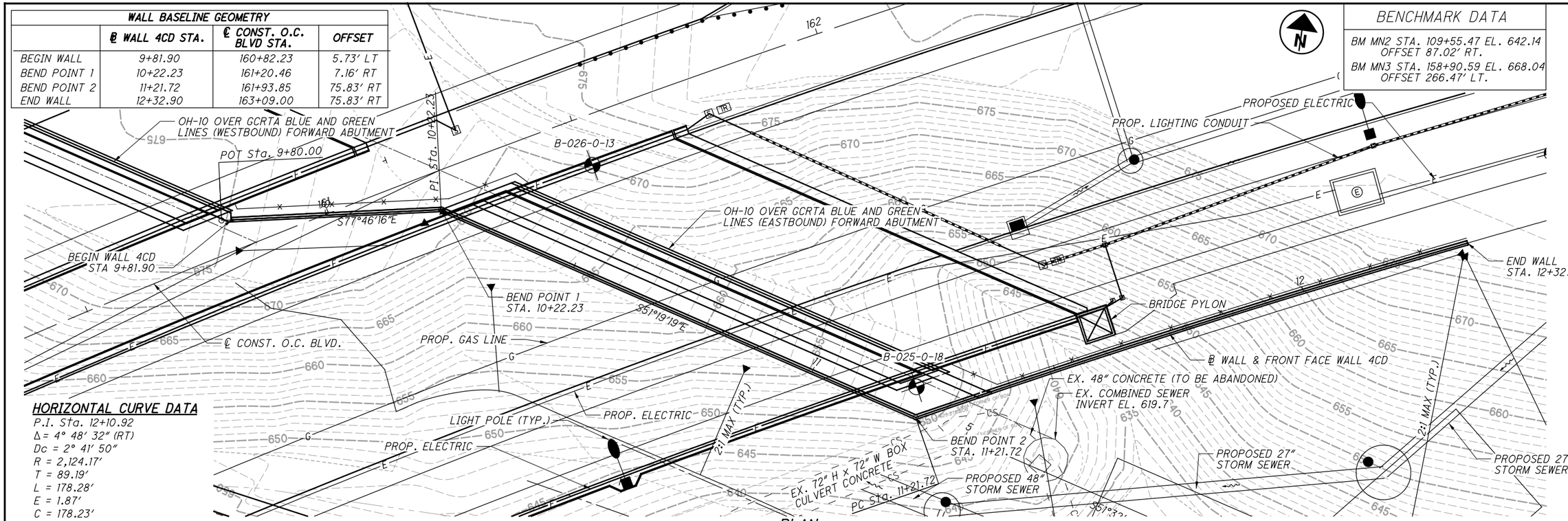

HORIZONTAL CURVE DATA

P.I. Sta. 12+10.92
Δ = 4° 48' 32" (RT)
Dc = 2° 41' 50"
R = 2,124.17'
T = 89.19'
L = 178.28'
E = 1.87'
C = 178.23'
C.B. = N 88° 23' 55" E

PLAN

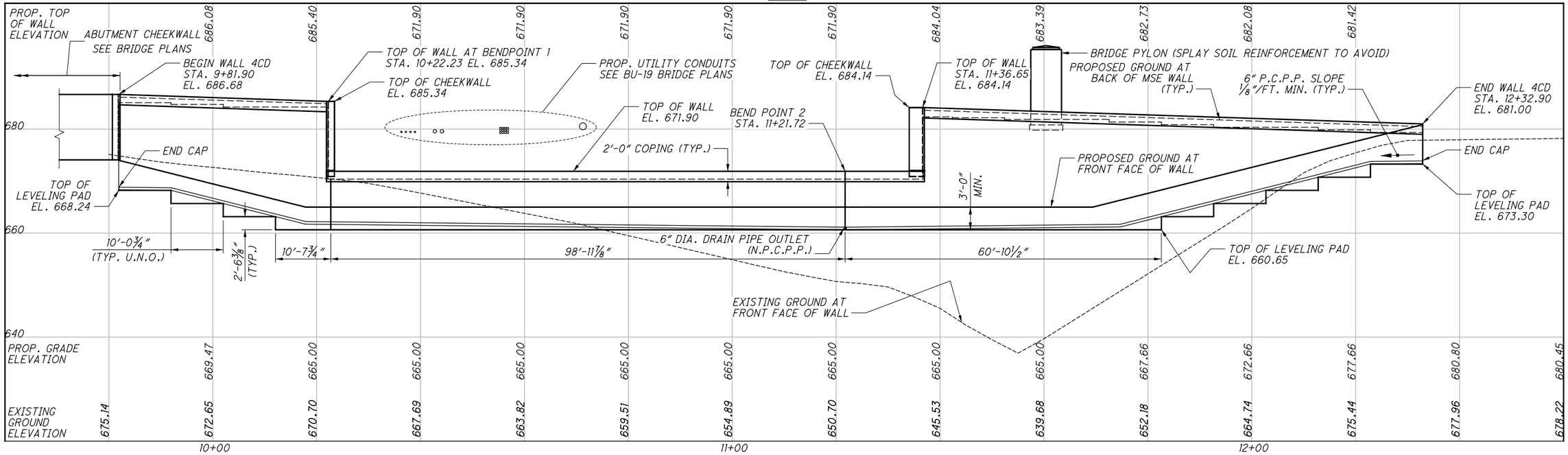

ELEVATION ALONG ℄ WALL 4CD

NOTES

EARTHWORK LIMITS SHOWN ARE APPROXIMATE. ACTUAL SLOPES SHALL CONFORM TO PLAN CROSS SECTIONS AND THE GRADING PLANS SHOWN IN BU-15.

LEGEND

BORING LOCATION

TBRBO - TO BE RELOCATED BY OTHERS

NO.	DATE	DESCRIPTION
2	2020-09-09	DC046
1	2020-06-08	DC040
0	2019-06-20	RFC

ISSUE RECORD

DESIGN AGENCY
E.L. ROBINSON ENGINEERING
1468 West 9th Street · Cleveland, Ohio 44113
www.elrobinsonengineering.com

DESIGNED	DRAWN	REVIEWED	DATE
LJS	DTA	RER	03/25/19
CHECKED	REVISED	STRUCTURE FILE NUMBER	
PAN			

RECORD PLANS

PLAN AND ELEVATION
WALL_4CD
MSE WALL AND ABUTMENT FOR OH-10 EB/WB OVER GCRTA BLUE/GREEN LINES

RECORD PLANS

CUY-IR490/SR010-2.09/19.28
PID No. 96833

BU-20 - WALL 4AB & 4CD
...\96833_04CD_WP001.dgn 5/19/2023 10:33:39 AM Gregory.Hertler

HORIZONTAL CURVE DATA

P.I. Sta. 12+10.92
Δ = 4° 48′ 32″ (RT)
Dc = 2° 41′ 50″
R = 2,124.17′
T = 89.19′
L = 178.28′
E = 1.87′
C = 178.23′
C.B. = N 88° 23′ 55″ E

WALL BASELINE GEOMETRY

	℄ WALL 4CD STA.	℄ CONST. O.C. BLVD STA.	OFFSET
BEGIN WALL	9+81.90	160+82.23	5.73′ LT
BEND POINT 1	10+22.23	161+20.46	7.16′ RT
BEND POINT 2	11+21.72	161+93.85	75.83′ RT
END WALL	12+32.90	163+09.00	75.83′ RT

SETTLEMENT PLATFORM LOCATIONS

S	BRIDGE SUBSTRUCTURE	℄ CONST. O.C. BLVD STA.	OFFSET
SP-5	EB F.A.	161+87	67′ RT
SP-6	EB F.A.	162+21	72′ RT

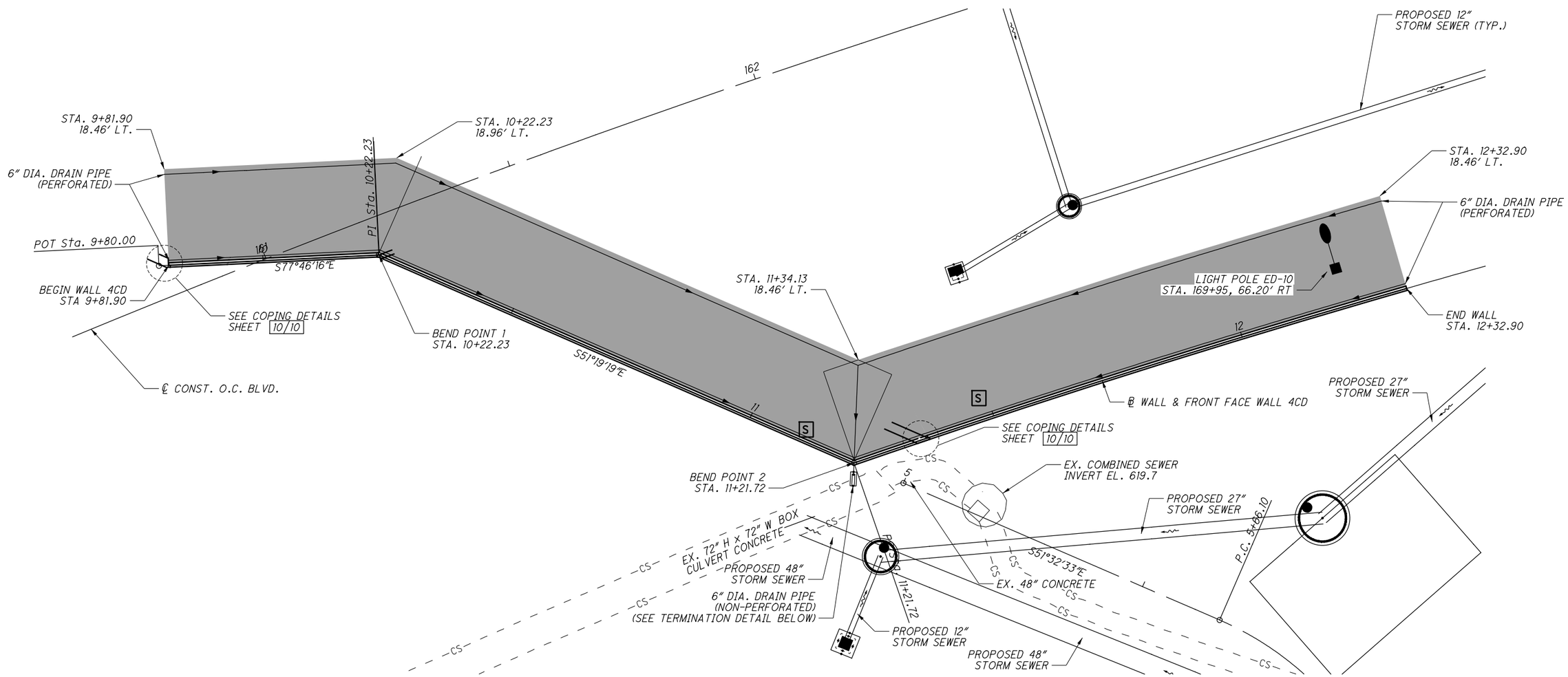

PLAN

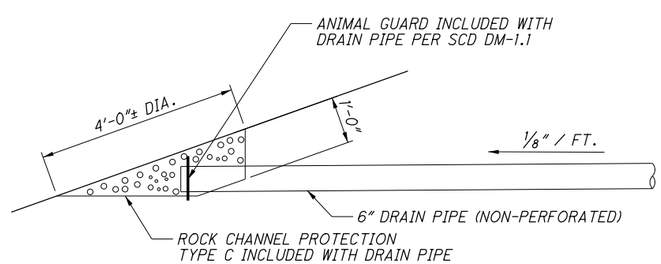

TERMINATION OF 6″ DRAIN PIPE DETAIL, AS PER PLAN

LEGEND

- LIMITS OF SELECT GRANULAR BACKFILL

S - SETTLEMENT PLATFORMS

NOTES:

1. FOR MORE DETAILS ABOUT THE LOCATION OF THE SETTLEMENT PLATFORMS SEE THE GENERAL NOTES ON SHEET 2/10.

NO.	DATE	DESCRIPTION
2	2020-09-09	DC046
1	2020-06-08	DC040
0	2019-06-20	RFC

ISSUE RECORD

DESIGN AGENCY
E.L. ROBINSON ENGINEERING
1468 West 9th Street · Cleveland, Ohio 44113
www.elrobinsonengineering.com

DESIGNED	DRAWN	REVIEWED	DATE
LJS	FIB	RER	03/25/19
CHECKED	REVISED	STRUCTURE FILE NUMBER	
PAN			

RECORD PLANS

SCHEMATIC PLAN

RETAINING WALL 4CD
MSE WALL AND ABUTMENT FOR OH-10 EB/WB OVER GCRTA BLUE/GREEN LINES

RECORD PLANS

CUY-IR490/SR010-2.09/19.28
PID No. 96833

BU-20 - WALL 4AB & 4CD
...\96833_04CD_WB001.dgn 9/15/2020 10:26:05 AM Gregory.Hertler

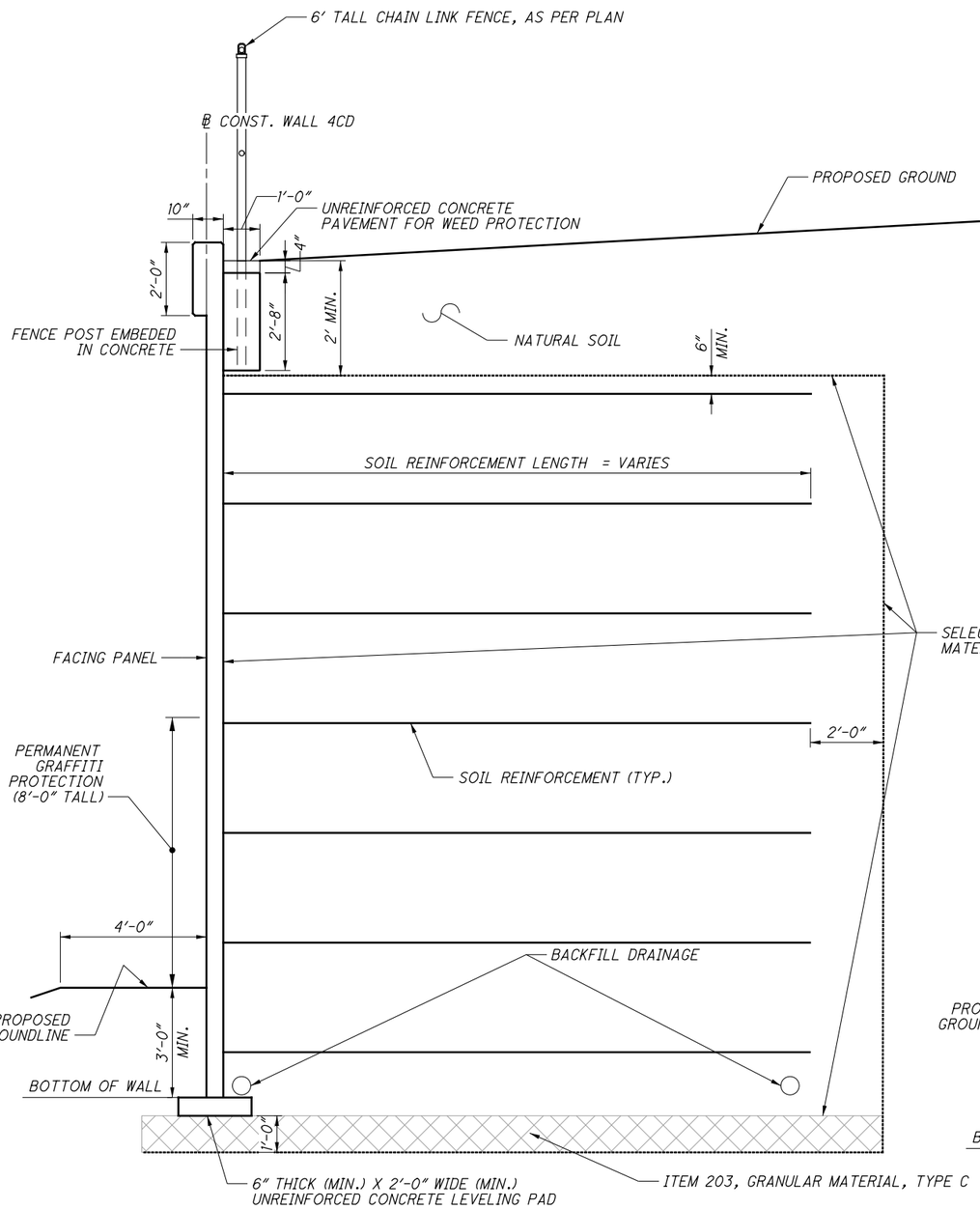

MSE WALL SECTION

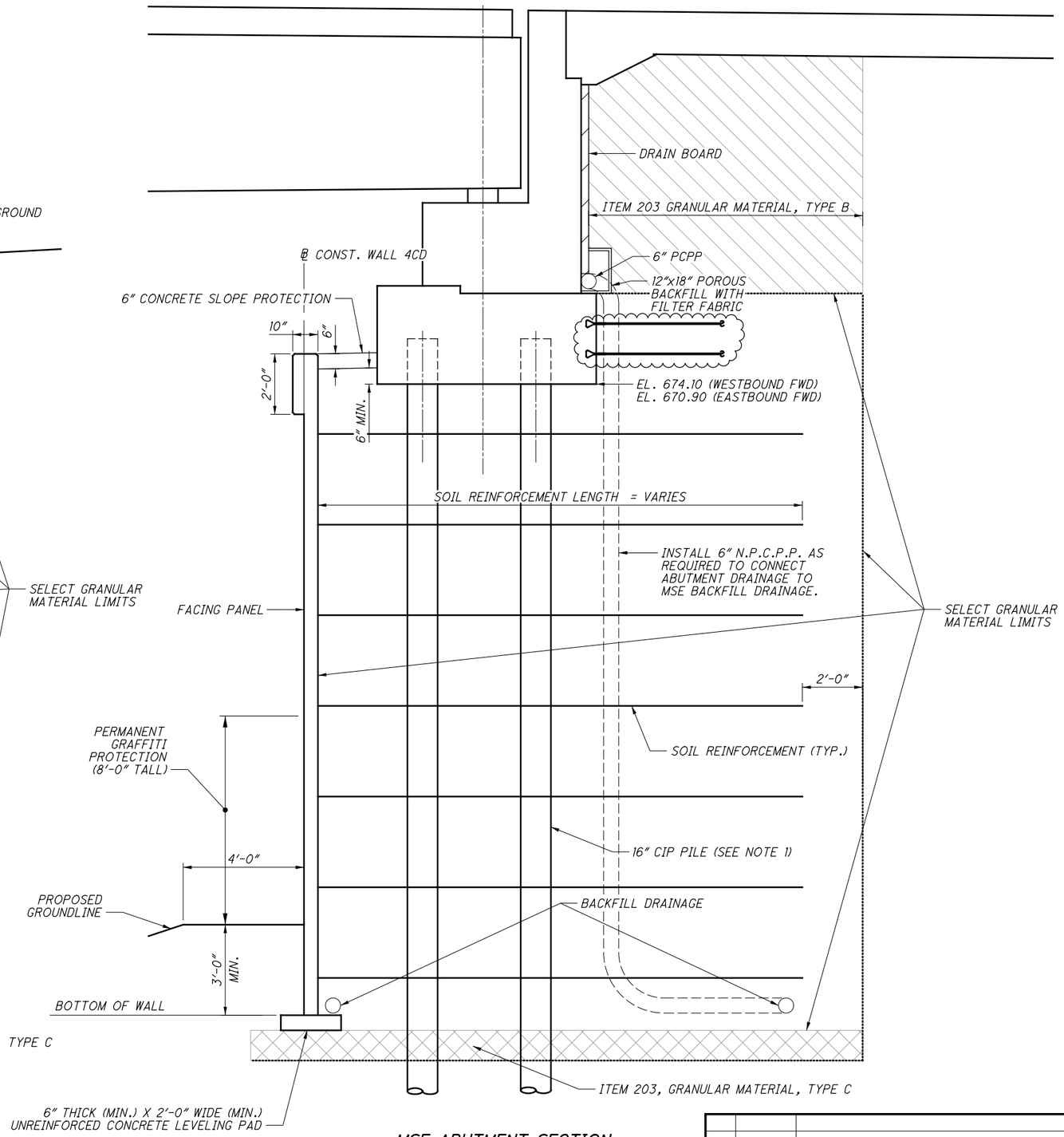

MSE ABUTMENT SECTION

NOTES

1. CONTRACTOR MAY UTILIZE THE YELLOW JACKET PILE SLEEVE SYSTEM MANUFACTURED BY FOUNDATION TECHNOLOGIES, INC.

NO.	DATE	DESCRIPTION
1	2024-09-10	RECORD DRAWINGS
0	2019-06-20	RFC

ISSUE RECORD

DESIGN AGENCY
E.L. ROBINSON ENGINEERING
1468 West 9th Street · Cleveland, Ohio 44113
www.elrobinsonengineering.com

DESIGNED	DRAWN	REVIEWED	DATE
LJS	LJS	RER	03/25/19
CHECKED	REVISED	STRUCTURE FILE NUMBER	
PAN			

RECORD PLANS

TYPICAL SECTION
WALLS 4CD
MSE WALL AND ABUTMENT FOR OH-10 EB/WB OVER GCRTA BLUE/GREEN LINES

RECORD PLANS

CUY-IR490/SR010-2.09/19.28
PID No. 96833

BU-20 - WALL 4AB & 4CD
...\96833_04CD_WY001.dgn 9/3/2025 11:22:24 AM Gregory.Hertler

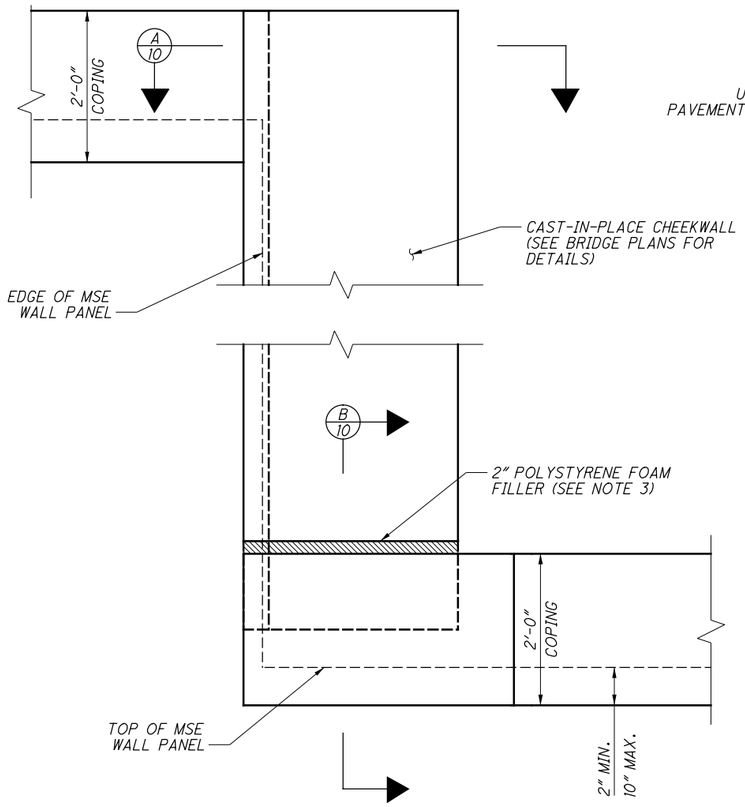

CORNER COPING DETAIL

ELEVATION VIEW

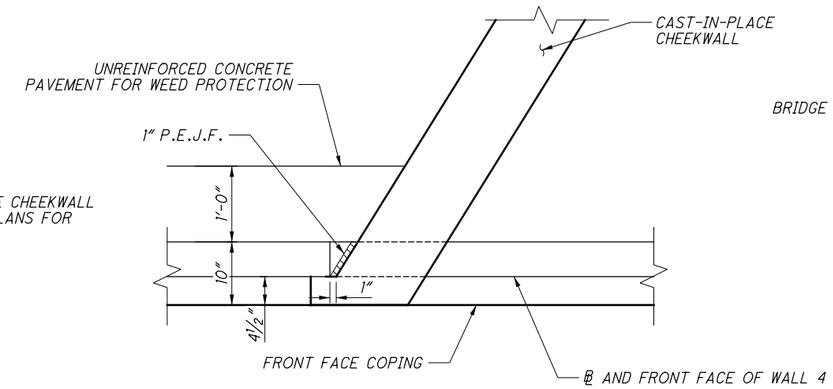

A/10 SECTION

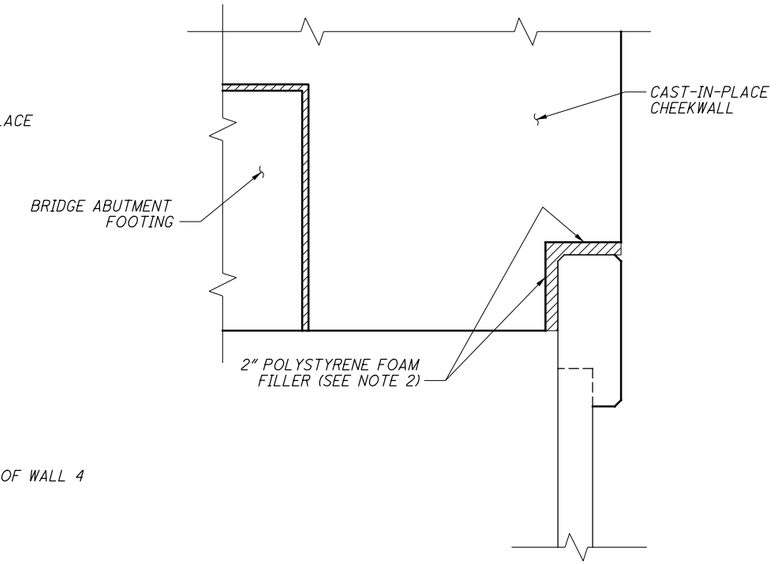

B/10 SECTION

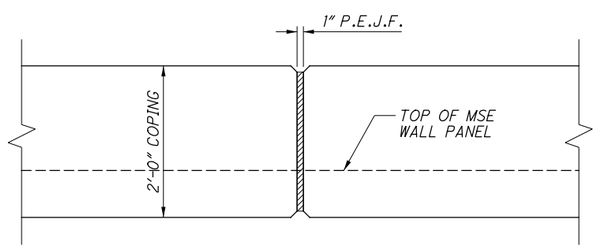

COPING EXPANSION JOINT - ELEVATION

(MAX JOINT SPACING IS 20')

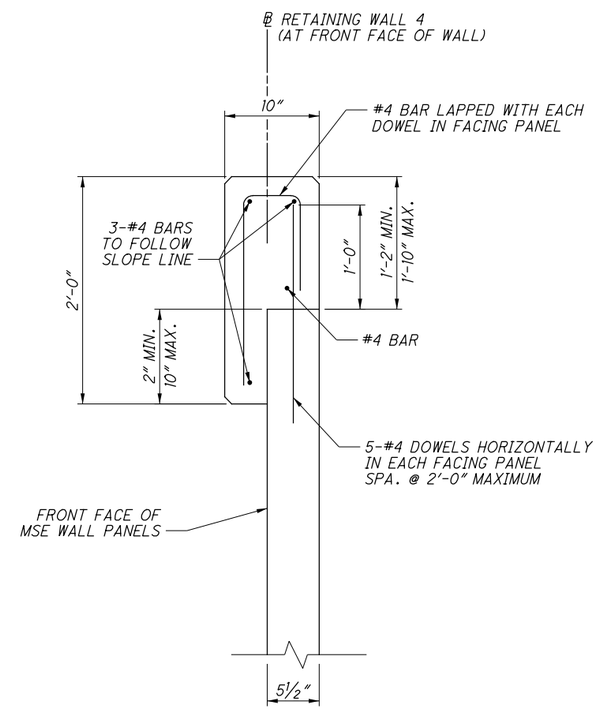

MSE WALL COPING DETAIL

(ALL REINFORCING STEEL TO BE EPOXY COATED)

NOTES:

1. DETAILS FOR ALL VERTICAL AND LONGITUDINAL REINFORCING STEEL IN THE COPING SHALL BE INCLUDED IN THE PROPRIETARY WALL MANUFACTURER'S SHOP DRAWING.
2. P.E.J.F. SHALL EXTEND THE FULL HEIGHT OF THE MSE WALL/WINGWALL JOINT.
3. FOR NEOPRENE SHEETING, P.E.J.F., & POLYSTYRENE FOAM FILLER QUANTITIES, SEE BRIDGE PLANS.

NO.	DATE	DESCRIPTION
0	2019-06-20	RFC

ISSUE RECORD

DESIGN AGENCY
E.L. ROBINSON ENGINEERING
1468 West 9th Street · Cleveland, Ohio 44113
www.elrobinsonengineering.com

DESIGNED	DRAWN	REVIEWED	DATE
LJS	FIB	RER	03/25/19
CHECKED	REVISED	STRUCTURE FILE NUMBER	
PAN			

RECORD PLANS

COPING DETAILS

WALLS 4AB/4CD

MSE WALL AND ABUTMENT FOR OH-10 EB/WB OVER GCRTA BLUE/GREEN LINES

RECORD PLANS

CUY-IR490/SR010-2.09/19.28

PID No. 96833

RECORD PLANS

0
BU-20 - WALL 4AB & 4CD
...\96833_04AB_WM001.dgn 7/5/2019 2:23:24 PM lschulte

YELLOW JACKET®

FRICTION REDUCTION PILE SLEEVE

TECHNICAL DATA SHEET

Properties	ASTM	Units	Typical Value
Specific Gravity	D-1505	g/cc	.906
Tensile @ Yield	D-638	Psi	4,000
Flexural Modulus	D-790	Psi	195,000
Elongation @ Break	D-638	%	>500
HDT @ 66psi	D-648	^{o}F	190
Notched Izod @73°F	D-256	Ft-lb/in	No Break
Rockwell Hardness	D-785	R Scale	75

Compiles with 21 CFR 177.1520 and Mil- P- 83668
Slip Agent and infusion rates to remain proprietary

Notice: All statements, information, and data given herein are believed to be accurate and reliable but are presented without guarantee, warranty, or responsibility of any kind, expressed or implied. Statements or suggestions concerning possible use of our products are made without representation of warranty that such use is free of patent infringement and are not recommendations to infringe any patent. The user should not assume that all safety measures are indicated or that other measures may not be required.

U.S. Patent # 9,903,086

All Rights Reserved 2017

Submittal: 055
Revision: 01
Date Submitted: 03/19/2020
Response Due: 03/26/2020

kokosing
CONSTRUCTION COMPANY, INC.
HEAVY HIGHWAY DIVISION
1539 Lowell Street • Elyria, Ohio 44035
Phone 440-322-2685 • Fax 440-322-2710

Project: ODOT 3000(17) – Opportunity Corridor 3
Subject: BU20_Geofoam Shop Drawings, & Product Data

To: Julie Meyer, P.E.
Ohio Department of Transportation – District 12
Email: Julie.Meyer@dot.ohio.gov

From: Marty Fritz
Kokosing Construction Company, Inc.
Email: mwf@kokosing.biz

We Are Sending:	Submitted For:
☐ As-Built Construction Drawings	☒ Approval
☐ Certifications / Test Results	☐ Acceptance
☐ Engineered / Working Drawings	☐ Record
☐ Product Data / Samples	
☐ Quality Control Procedures	**Sent Via:**
☒ Shop Drawings	☒ Attached (Electronic)
☐ Other:	☐ Attached (Hard Copy)

Submittal #	Spec	Revision	Description	Status
055		01	Geofoam Shop Drawings	For Approval

Comments:

Please see the attached *Revised* shop drawing submittal for geofoam fill behind Wall 4AB (BU20). This revised submittal addresses review comments received from ODOT on 2/25/2020. Note that the geofoam layout in these shop drawings corresponds to the revised location shown in the MSE Wall 4AB shop drawings. Included with this submittal are the following:

- Revised Shop Drawings-Geofoam fill
- Additional Geofoam product data
- Connector Plate product data
- Geomembrane product data (XR5 8130)
- Misc. correspondence from designers & suppliers
- Note: Evidence of third-party quality monitoring was included with the original submittal on 02/03/2020

Please feel free to contact me for any questions/concerns regarding this submittal.

Signed: Marty Fritz

GeoSpec® General Notes:

Design Notes:

1. As per project specifications, the design of the GeoSpec fill material is based upon the following criteria:

Material Property	Test Method	Units	Type Designation EPS 29
Test Density	ASTM C303	lbs/ft³	1.8
Compressive Resistance *@ 1% Deformation* *@ 5% Deformation* *@ 10% Deformation*	ASTM D1621	psi	 *10.9* *24.7* *29.0*
Flexural Strength *Minimum*	ASTM C203	psi	50
Dimensional Tolerances	ASTM D6817	%	± 0.5%
Limiting Oxygen Index *Minimum*	ASTM D2863	%	24

Notes:

1. The following information is provided for general guidance. In case of dispute, project specifications gover.
2. GeoSpec lightweight fill material for this project will be treated with Lanxess Preventol TM Preservative Insecticide treatment
3. GeoSpec fill material chemical resistance characteristics shall be as per Plasti-Fab Product Information Bulletin 1015.
4. Use adhesive compatible with expanded polystyrene foam. Examples of adhesives would be Dow Insta Stik polyurethane adhesive or Lepage PL300 Foam Board Adhesive.
5. Before shipping to the site, blocks are seasoned by storing them at the plant for at least 72 hours.

Site Preparation:

The bottom layer of GeoSpec fill material block must to be supported over its entire lower face, so a plane surface, inclined as appropriate, must be prepared. Departures from planarity may not exceed ± 12 mm in 3 meters (1/2" in 10 feet). The leveling material used is generally sand; its thickness depends on the ground and the machines to be employed.

Once GeoSpec fill material blocks are in place, they should be covered as soon as possible.

Block Shipment, Handling and On-Site Storage

The types of trucks used to deliver to site (e.g. closed or flat bed trailers), the loading of the trailers and the sequencing of delivery must be coordinated with Plasti-Fab well in advance of delivery. Typically, GeoSpec fill material is delivered in trailer load quantity in standard closed trailers. The blocks are not normally packaged - i.e. plastic wrap not required - unless on-site storage for a period of time is anticipated.

Damage can occur during shipment and handling on site. Damage which occurs during delivery should be identified to Plasti-Fab personnel immediately.

At all stages of construction, GeoSpec fill material should be handled in such a manner so as to minimize possible damage to blocks. GeoSpec fill material is easily positioned at the work site. Lifting or transporting blocks in any manner that creates dents, holes or broken edges should be avoided.

If GeoSpec fill material blocks are to be stockpiled on site until placement, a secure storage area should be designated for this purpose. No traffic on the geofoam blocks should be permitted, especially vehicles or on-site equipment. The blocks should be stored away from any heat source or construction activity produces heat or open flame. GeoSpec fill material blocks stored on site should be secured with sand bags or similar "soft" weights to prevent their being dislodged by wind.

Combustibility

GeoSpec fill material contains a flame-retardant additive. However, it may ignite when exposed to open flame or welding activities that are part of the construction activities. Therefore, until the GeoSpec fill material block has been completely covered by concrete slab or directly abutting adjacent materials that conceal the foam, smoking and the use of any tools that may create an open flame in the proximity of GeoSpec fill material should be forbidden.

Block Layout and Placement

The following general guidelines for GeoSpec fill material block placement should be followed:

- Blocks should be placed with their thickness dimension oriented vertically.
- All blocks must be butted tightly against each on all surfaces. When GeoSpec fill material blocks must be cut to fit to complete a layer - custom cutting is completed on site - the cut blocks are to be located on the interior of the layers.
- Standard block sizes shall be as shown on GeoSpec block layout which has been developed with the overall objective to create a layout of blocks that is geometrically interlocked to the greatest extent possible.
- If it is necessary to cut block on site, the most precise method of cutting can be done using a portable hot-wire device that Plasti-Fab can provide assistance in assembling. Other methods of cutting include use of a wire saw or chain saw.

CONNECTOR PLATE:

USE DOUBLE-FACED GEOGRIPPER CONNECTOR PLATES SPACED A MAXIMUM OF 5 FEET IN EACH DIRECTION TO SECURE EACH HORIZONTAL JOINT BETWEEN COURSES OF BLOCKS.
SEE GEOGRIPPER PRODUCT DATA SHEET FOR SPECIFICATIONS.

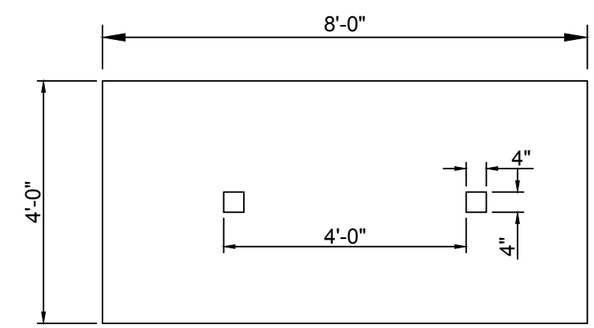

No.	REVISION DESCRIPTION	DATE	BY	CHKD	APPD
R1	UPDATE FILL SIZE AND LOCATION PER CLIENT	1/24/20	LX	JW	JW
R2	ADD NOTE FOR TERMITE RESISTANCE	1/31/20	LX	JW	JW
R3	UPDATE PROPERTY TABLE	3/04/20	AT	JW	JW

Plasti-Fab™ EPS PRODUCT SOLUTIONS

Drawing Title: General Notes

Project: ODOT 173000 Cuyahoga County EPS GEOFOAM FILL

Contractor: KOKOSING CONSTRUCTION

Job No.

DESIGN	LX	DATE	31-Jan-20
DRAWN	LX	DATE	31-Jan-20
CHECKED	JW	DATE	31-Jan-20
DRAWING No.	01	REV.	R3

NOTES:
1. For general EPS notes see Page 01.
2. All dimensions to be confirmed by contractor.

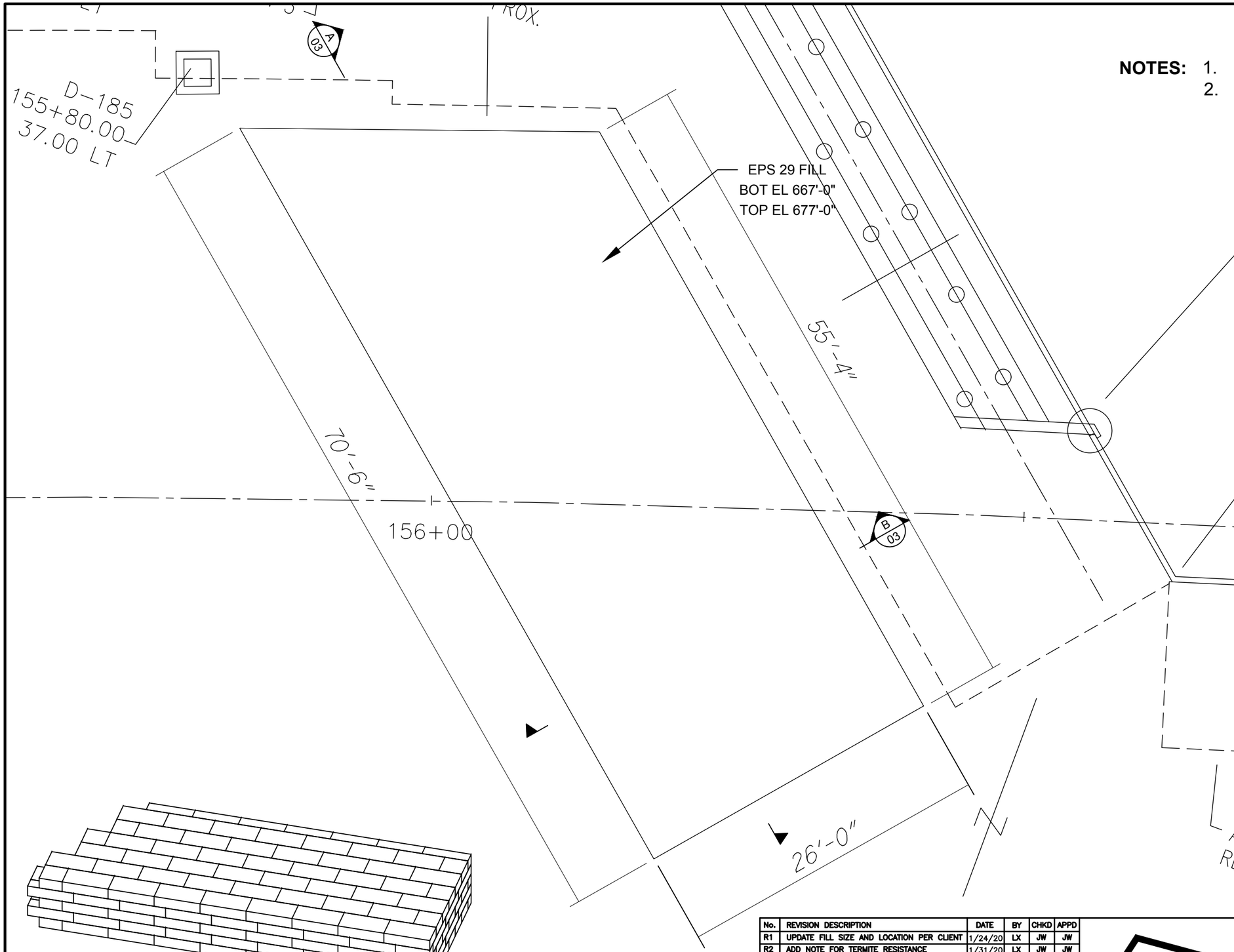

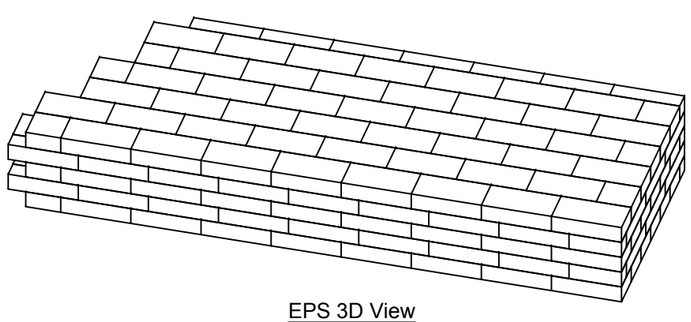

EPS 3D View

BLOCK QUANTITY SUMMARY				
BLOCK TYPE		L x W x D	QUANTITY	VOLUME (y^3)
C01	EPS 29	96"x48"x24"	209	495.41
C02	EPS 29	48"x48"x24"	52	61.63
C03	EPS 29	96"x24"x24"	45	53.33
		TOTAL	306	610.37

No.	REVISION DESCRIPTION	DATE	BY	CHKD	APPD
R1	UPDATE FILL SIZE AND LOCATION PER CLIENT	1/24/20	LX	JW	JW
R2	ADD NOTE FOR TERMITE RESISTANCE	1/31/20	LX	JW	JW
R3	UPDATE PROPERTY TABLE	3/04/20	AT	JW	JW

Plasti-Fab™ EPS PRODUCT SOLUTIONS

Drawing Title: Overall Plan View

Project: ODOT 173000 Cuyahoga County EPS GEOFOAM FILL

Contractor: KOKOSING CONSTRUCTION

Job No.

DESIGN	LX	DATE	31-Jan-20
DRAWN	LX	DATE	31-Jan-20
CHECKED	JW	DATE	31-Jan-20
DRAWING No.	02	REV.	R3

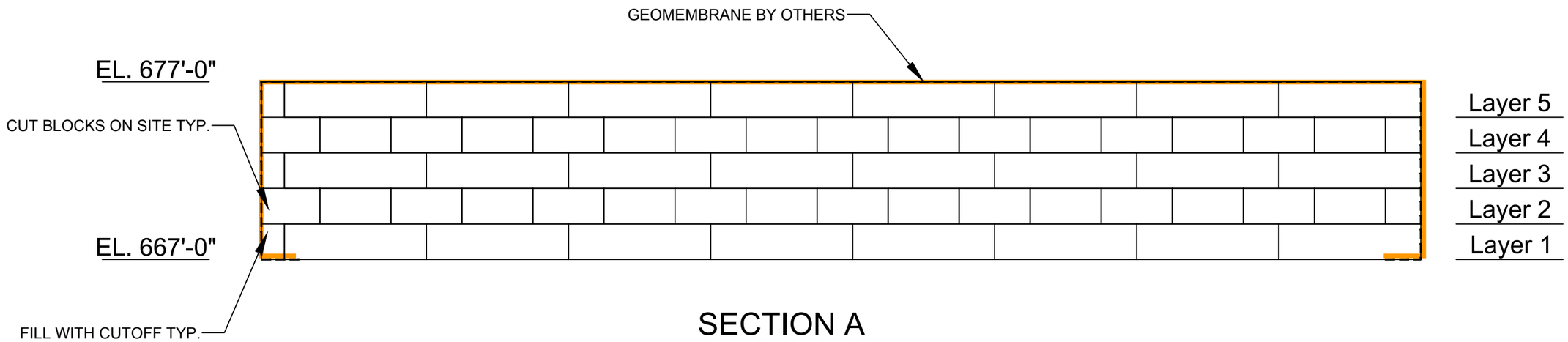

SECTION A

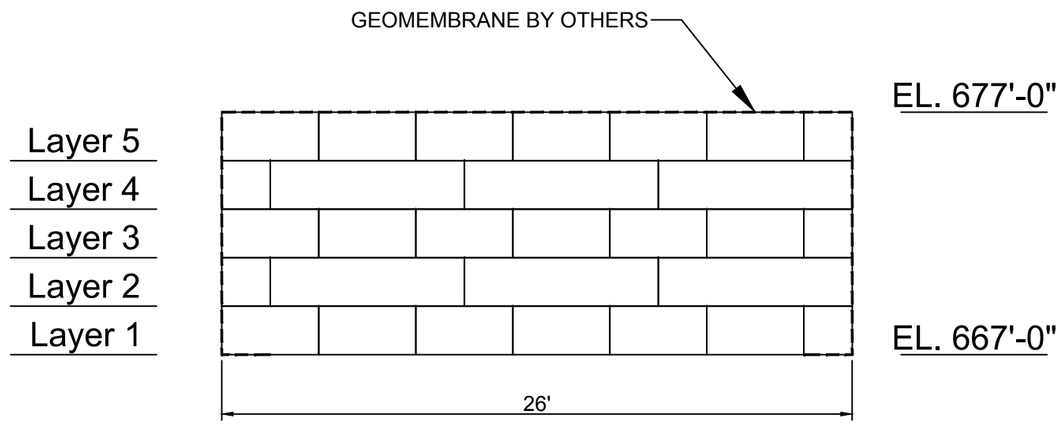

SECTION B

No.	REVISION DESCRIPTION	DATE	BY	CHKD	APPD
R1	UPDATE FILL SIZE AND LOCATION PER CLIENT	1/24/20	LX	JW	JW
R2	ADD NOTE FOR TERMITE RESISTANCE	1/31/20	LX	JW	JW
R3	UPDATE PROPERTY TABLE	3/04/20	AT	JW	JW

Plasti-Fab™ EPS PRODUCT SOLUTIONS

Drawing Title: Sections

Job No.

Project: ODOT 173000 Cuyahoga County EPS GEOFOAM FILL

DESIGN: LX — DATE: 31-Jan-20

DRAWN: LX — DATE: 31-Jan-20

CHECKED: JW — DATE: 31-Jan-20

Contractor: KOKOSING CONSTRUCTION

DRAWING No.: 03 — REV.: R3

NOTES:
1. All dimensions to be confirmed by contractor.
2. Blocks to be cut on site to fit by general contractor.

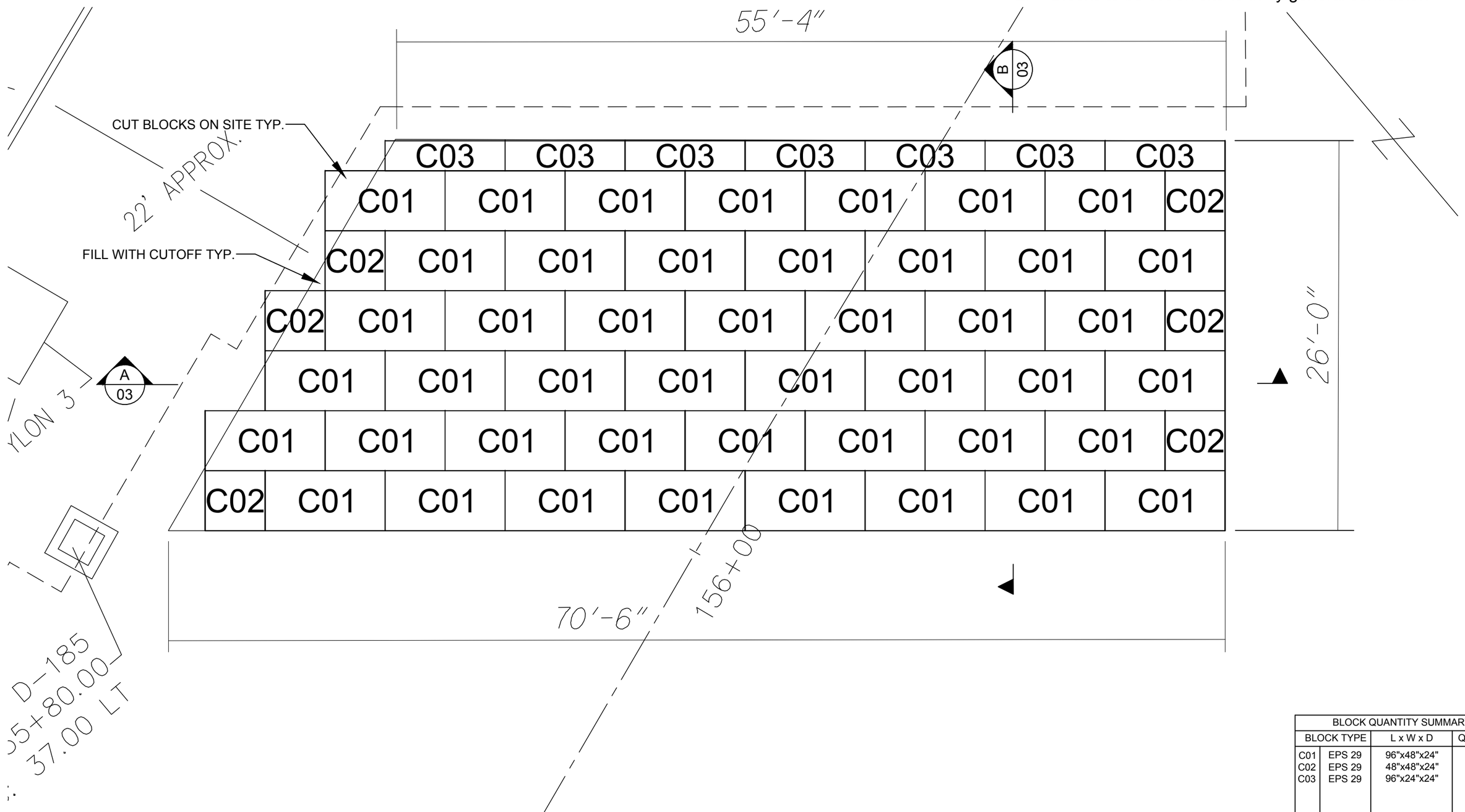

BLOCK QUANTITY SUMMARY			
BLOCK TYPE		L x W x D	QUANTITY
C01	EPS 29	96"x48"x24"	45
C02	EPS 29	48"x48"x24"	6
C03	EPS 29	96"x24"x24"	7

No.	REVISION DESCRIPTION	DATE	BY	CHKD	APPD
R1	UPDATE FILL SIZE AND LOCATION PER CLIENT	1/24/20	LX	JW	JW
R2	ADD NOTE FOR TERMITE RESISTANCE	1/31/20	LX	JW	JW
R3	UPDATE PROPERTY TABLE	3/04/20	AT	JW	JW

Plasti-Fab™ EPS PRODUCT SOLUTIONS

Drawing Title: Layer 1 Layout

Project: ODOT 173000 Cuyahoga County EPS GEOFOAM FILL

Contractor: KOKOSING CONSTRUCTION

Job No.

DESIGN	LX	DATE	31-Jan-20
DRAWN	LX	DATE	31-Jan-20
CHECKED	JW	DATE	31-Jan-20
DRAWING No.	04	REV.	R3

NOTES:
1. All dimensions to be confirmed by contractor.
2. Blocks to be cut on site to fit by general contractor.

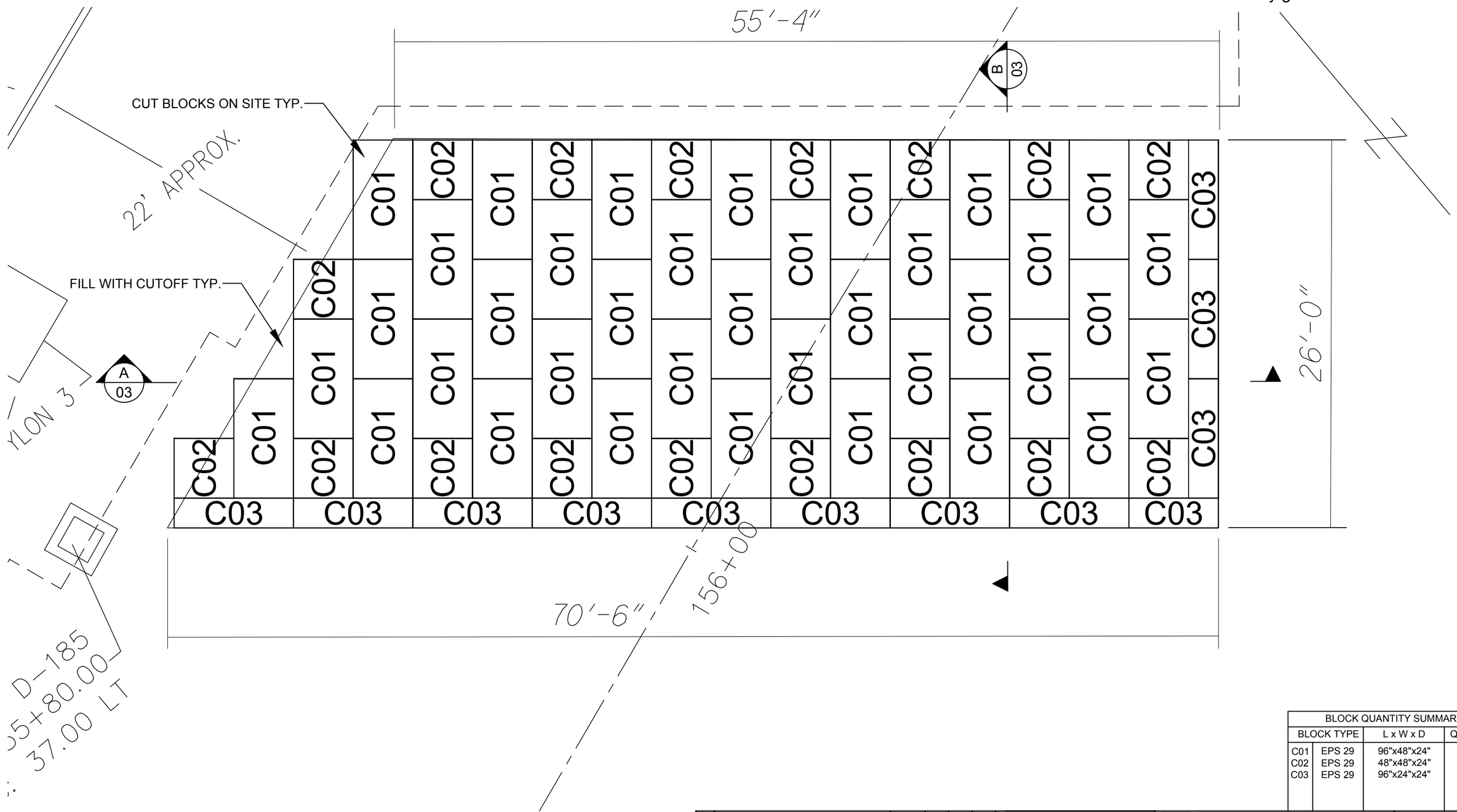

BLOCK QUANTITY SUMMARY			
BLOCK TYPE		L x W x D	QUANTITY
C01	EPS 29	96"x48"x24"	37
C02	EPS 29	48"x48"x24"	17
C03	EPS 29	96"x24"x24"	12

No.	REVISION DESCRIPTION	DATE	BY	CHKD	APPD
R1	UPDATE FILL SIZE AND LOCATION PER CLIENT	1/24/20	LX	JW	JW
R2	ADD NOTE FOR TERMITE RESISTANCE	1/31/20	LX	JW	JW
R3	UPDATE PROPERTY TABLE	3/04/20	AT	JW	JW

Plasti-Fab™ EPS PRODUCT SOLUTIONS

Drawing Title: Layer 2 Layout

Project: ODOT 173000 Cuyahoga County EPS GEOFOAM FILL

Contractor: KOKOSING CONSTRUCTION

Job No.

DESIGN LX DATE 31-Jan-20

DRAWN LX DATE 31-Jan-20

CHECKED JW DATE 31-Jan-20

DRAWING No. 05 REV. R3

NOTES:
1. All dimensions to be confirmed by contractor.
2. Blocks to be cut on site to fit by general contractor.

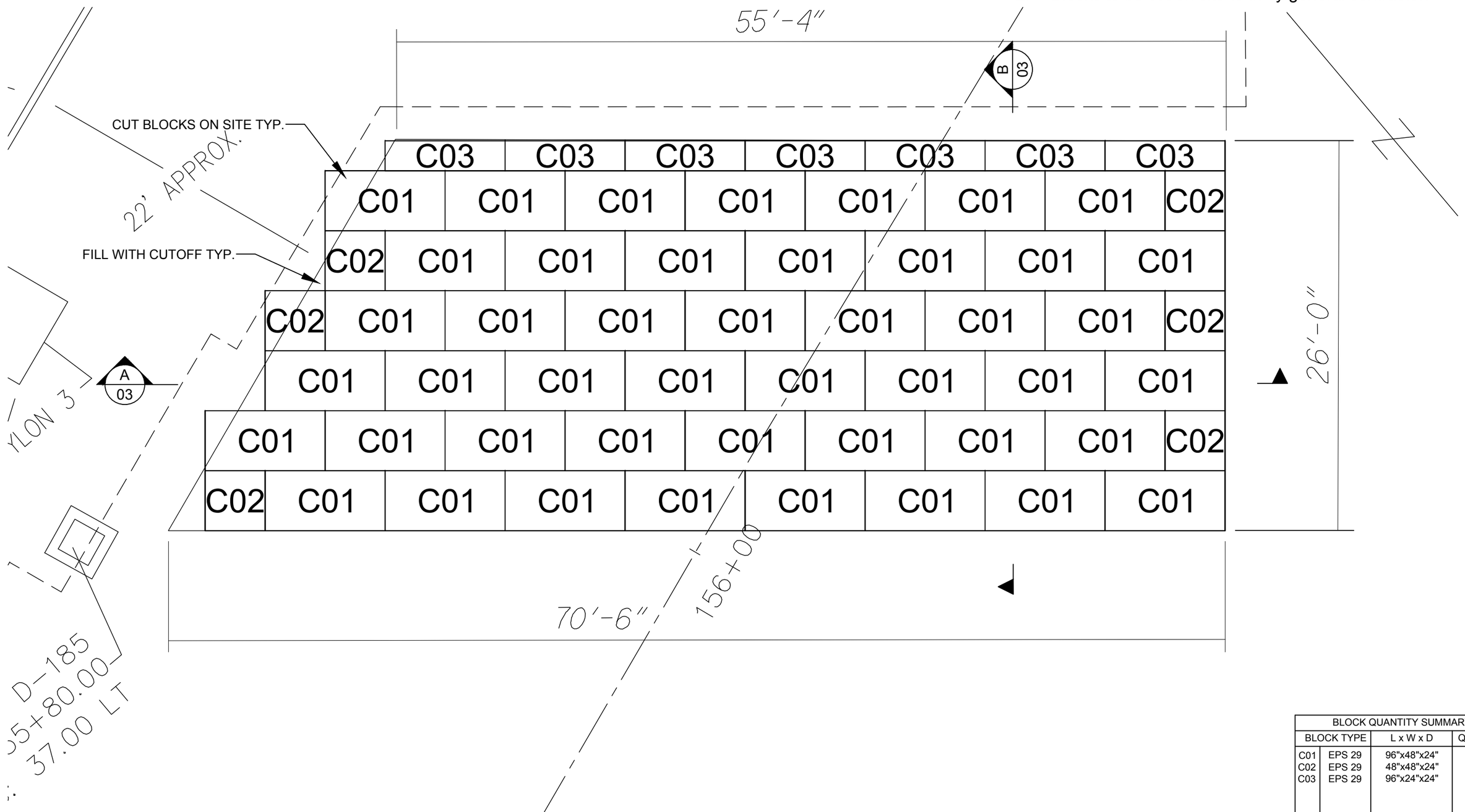

BLOCK QUANTITY SUMMARY			
BLOCK TYPE		L x W x D	QUANTITY
C01	EPS 29	96"x48"x24"	45
C02	EPS 29	48"x48"x24"	6
C03	EPS 29	96"x24"x24"	7

No.	REVISION DESCRIPTION	DATE	BY	CHKD	APPD
R1	UPDATE FILL SIZE AND LOCATION PER CLIENT	1/24/20	LX	JW	JW
R2	ADD NOTE FOR TERMITE RESISTANCE	1/31/20	LX	JW	JW
R3	UPDATE PROPERTY TABLE	3/04/20	AT	JW	JW

Plasti-Fab™ EPS PRODUCT SOLUTIONS

Drawing Title: Layer 3 Layout

Project: ODOT 173000 Cuyahoga County EPS GEOFOAM FILL

Contractor: KOKOSING CONSTRUCTION

Job No.

DESIGN	LX	DATE	31-Jan-20
DRAWN	LX	DATE	31-Jan-20
CHECKED	JW	DATE	31-Jan-20
DRAWING No.	06	REV.	R3

NOTES:
1. All dimensions to be confirmed by contractor.
2. Blocks to be cut on site to fit by general contractor.

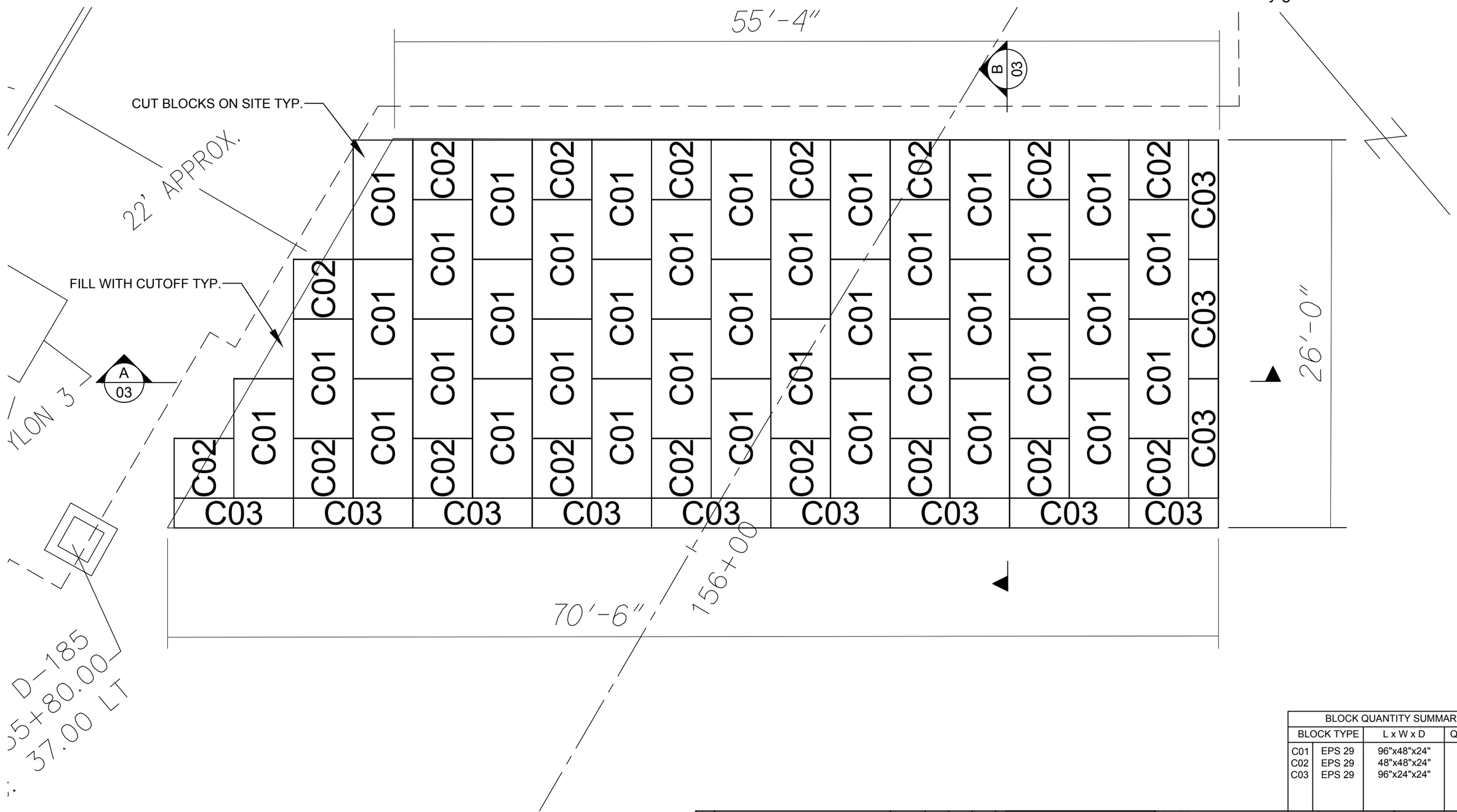

BLOCK QUANTITY SUMMARY			
BLOCK TYPE		L x W x D	QUANTITY
C01	EPS 29	96"x48"x24"	37
C02	EPS 29	48"x48"x24"	17
C03	EPS 29	96"x24"x24"	12

No.	REVISION DESCRIPTION	DATE	BY	CHKD	APPD
R1	UPDATE FILL SIZE AND LOCATION PER CLIENT	1/24/20	LX	JW	JW
R2	ADD NOTE FOR TERMITE RESISTANCE	1/31/20	LX	JW	JW
R3	UPDATE PROPERTY TABLE	3/04/20	AT	JW	JW

Plasti-Fab™ EPS PRODUCT SOLUTIONS

Drawing Title: Layer 4 Layout

Project: ODOT 173000 Cuyahoga County EPS GEOFOAM FILL

Contractor: KOKOSING CONSTRUCTION

Job No.

DESIGN LX DATE 31-Jan-20

DRAWN LX DATE 31-Jan-20

CHECKED JW DATE 31-Jan-20

DRAWING No. 07 REV. R3

NOTES:
1. All dimensions to be confirmed by contractor.
2. Blocks to be cut on site to fit by general contractor.

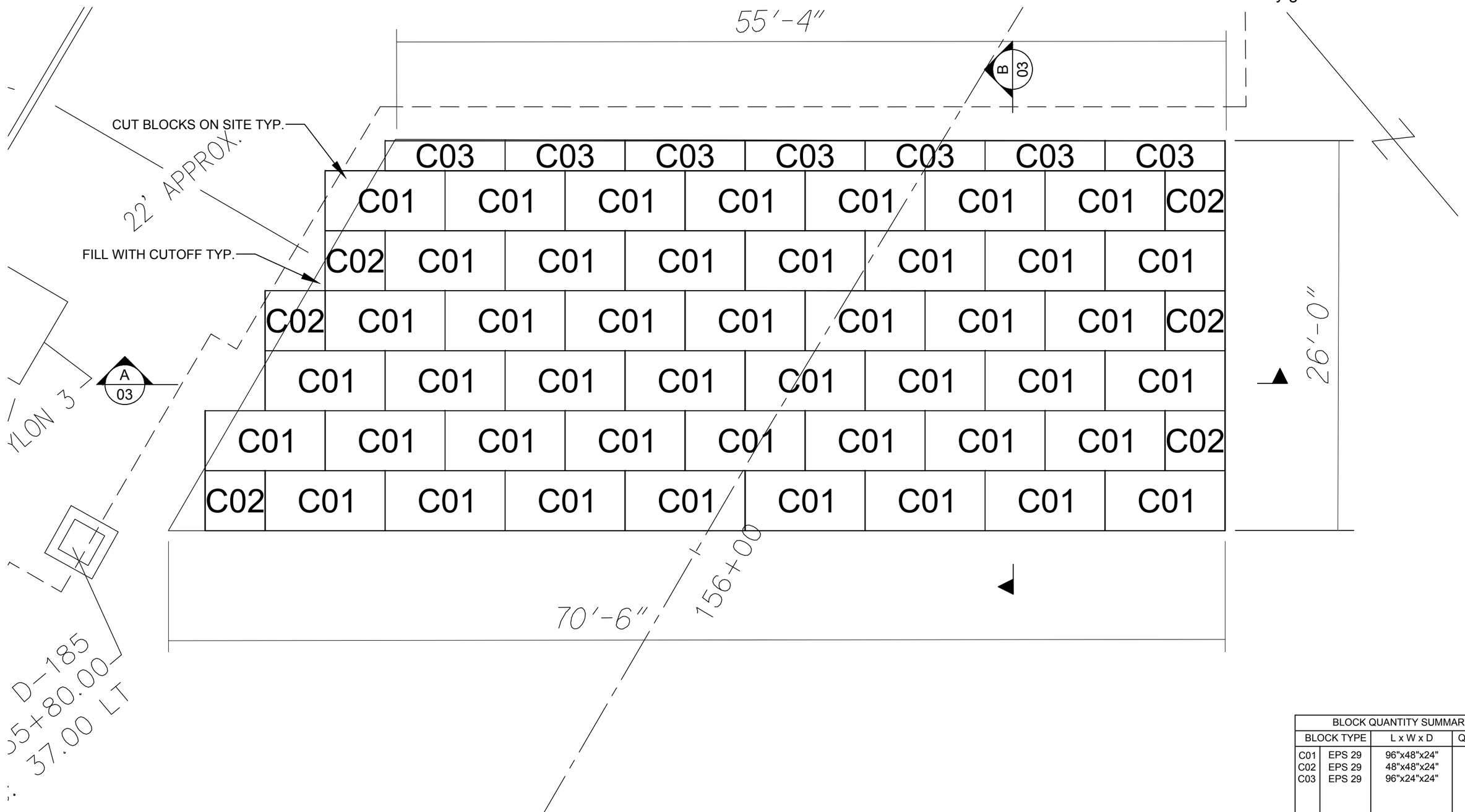

BLOCK QUANTITY SUMMARY			
BLOCK TYPE		L x W x D	QUANTITY
C01	EPS 29	96"x48"x24"	45
C02	EPS 29	48"x48"x24"	6
C03	EPS 29	96"x24"x24"	7

No.	REVISION DESCRIPTION	DATE	BY	CHKD	APPD
R1	UPDATE FILL SIZE AND LOCATION PER CLIENT	1/24/20	LX	JW	JW
R2	ADD NOTE FOR TERMITE RESISTANCE	1/31/20	LX	JW	JW
R3	UPDATE PROPERTY TABLE	3/04/20	AT	JW	JW

Plasti-Fab™ EPS PRODUCT SOLUTIONS

Drawing Title: Layer 5 Layout

Project: ODOT 173000 Cuyahoga County EPS GEOFOAM FILL

Contractor: KOKOSING CONSTRUCTION

Job No.

DESIGN	LX	DATE	31-Jan-20
DRAWN	LX	DATE	31-Jan-20
CHECKED	JW	DATE	31-Jan-20
DRAWING No.	08	REV.	R3

Marty Fritz

From: Peter Narsavage <pnarsavage@elrobinson.com>
Sent: Thursday, January 23, 2020 1:54 PM
To: Marty Fritz
Cc: Mike Luyster; Jason Wise; Ciborek, Larry; Cummings, Christopher
Subject: RE: 18631 MSE Walls Rev 2

Security Alert - External Email

Marty,
What is shown in the MSE wall shop drawings is good. The 26 ft dimension is the important one.

-Peter

Peter Narsavage, P.E.
E.L. Robinson Engineering
Senior Project Manager - Columbus
1801 Watermark Drive, Suite 310
Columbus, OH 43215
P: (614) 586-0642 C: (614) 432-4030 F: (614) 586-0648
pnarsavage@elrobinson.com
www.elrobinsonengineering.com
Follow Us: LinkedIn|Facebook|Twitter

From: Marty Fritz <mwf@kokosing.biz>
Sent: Thursday, January 23, 2020 1:36 PM
To: Peter Narsavage <pnarsavage@elrobinson.com>
Cc: Mike Luyster <mrl@kokosing.biz>; Jason Wise <jwise@elrobinson.com>; Ciborek, Larry <lciborek@mbakerintl.com>; Cummings, Christopher <Ccummings@mbakerintl.com>
Subject: FW: 18631 MSE Walls Rev 2

Peter,

Please see below regarding Geofoam behind Wall 4AB. I didn't realize that when the foam was moved in the MSE shop drawings, the dimensions of the footprint were also changed. I stumbled upon this while reviewing the geofoam shop drawings, and would like to confirm with you that this is acceptable. Or, do we need to hold the original plan indicated dimensions but use the layout provided in the MSE shop drawings?

Kind of confusing-give me a call if you would like to discuss.

Thanks,
Marty

From: ARNOLD Connie <carnold@reinforcedearth.com>
Sent: Thursday, January 23, 2020 1:22 PM
To: Marty Fritz <mwf@kokosing.biz>
Subject: RE: 18631 MSE Walls Rev 2

Security Alert - External Email

Marty,

Yes the dimension is different, I measured 70’-10”. During design we found that the length of the MSE strips were longer than what was estimated in the plans. We checked with the engineer who verified that the geofoam limits could be adjusted to fit the longer strips. Email is attached.

Thanks,

Connie

From: Marty Fritz <mwf@kokosing.biz>
Sent: Thursday, January 23, 2020 11:07 AM
To: ARNOLD Connie <carnold@reinforcedearth.com>
Subject: RE: 18631 MSE Walls Rev 2

Connie,

I am trying to reconcile MSE Wall drawings, contract drawings, and Geofoam shop drawings to make sure the foam shop drawings are correct. Through the course of doing this, I noticed the geofoam in the ReCo drawings (sheet 3/13) appears to scale to the dimensions shown in the screenshot below. The contract drawings have the 70.45’ dimension below shown as 75’-4”. Are my scaled dimensions correct?

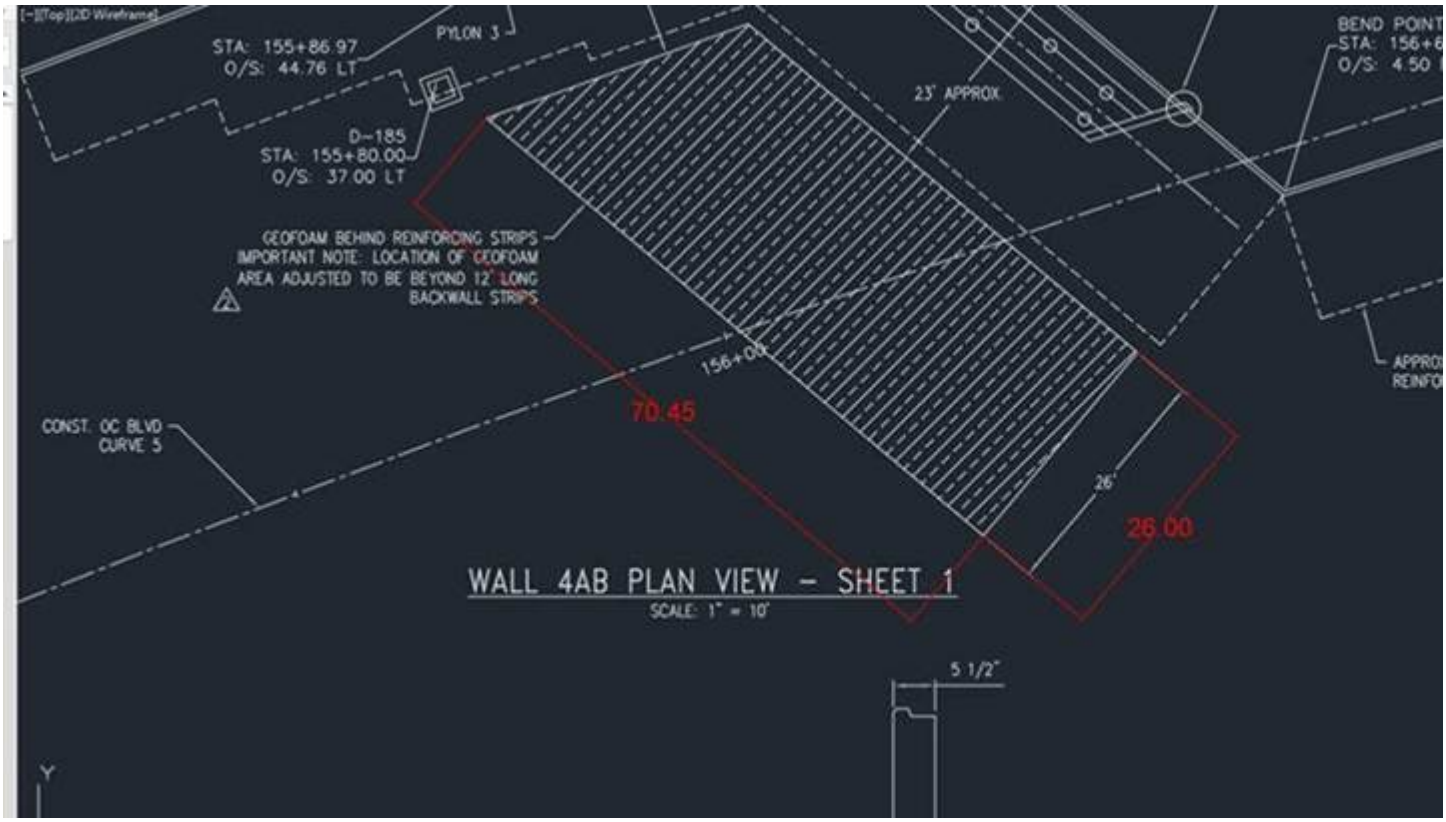

Let me know if you have any questions.

Thanks,
Marty

MARTY FRITZ

PROJECT ENGINEER
Mobile# (330) 819-9206

LEAD WITH SAFETY!

From: ARNOLD Connie <carnold@reinforcedearth.com>
Sent: Friday, November 8, 2019 1:09 PM
To: Marty Fritz <mwf@kokosing.biz>
Cc: Mike Luyster <mrl@kokosing.biz>; QUINN Eugene <EQuinn@reinforcedearth.com>; SISON Michael <MSison@reinforcedearth.com>
Subject: 18631 MSE Walls Rev 2

Security Alert - External Email

Marty,

See revised submittal attached.

Thanks,

Connie

Connie Arnold, P.E.
Regional Engineer
The Reinforced Earth Company
Office: 703.547.8797 x1122

Follow us: LinkedIn | Twitter | Facebook | YouTube | Instagram

Plasti·Fab®
EPS PRODUCT SOLUTIONS
Better building ideas from PFB™

BULLETIN NO.	1014
ISSUED:	February 28, 2014
REPLACES:	NEW

Product Information Bulletin

GeoSpec® Lightweight Fill Material - CAN & US Product Certification LIstings

GeoSpec® lightweight fill material is listed with Intertek Testing Services for material properties and surface burning characteristics. The Intertek certification mark below is used on ***GeoSpec*** Certificate of Compliance signifies third party certification/quality control of product.

C US
Intertek

The Intertek listing confirms GeoSpec lightweight fill material is manufactured in accordance with ASTM D6817, ***Standard Specification for Rigid Cellular Polystyrene Geofoam***.

For Canadian product applications, the table below provides surface burning characteristics tested in accordance with CAN/ULC-S102.2-M, ***Standard Method of Test for Surface Burning Characteristics of Flooring, Floor Covering, and Miscellaneous Materials and Assemblies***.

EPS Density kg/m^3	Classification or Rating	
	Flame Spread	Smoke Developed
12.8 – 40.0	290	Greater than 500

For US product applications, the table below provides surface burning characteristics tested in accordance with ASTM E84, ***Standard Test Method for Surface Burning Characteristics of Building Materials***.

Classification or Rating	
Flame Spread	Smoke Developed
20	300

Copyright © 2014 by Plasti-Fab Ltd. All rights reserved.
Plasti-Fab, PlastiSpan, DuroFoam, DuroFloat, GeoSpec, GeoSpan, GeoVoid, Advantage ICF System and Insulspan are registered trademarks of Plasti-Fab Ltd.
Printed in Canada

Plasti·Fab®
EPS PRODUCT SOLUTIONS
Better building ideas from PFB™

BULLETIN NO.	1015
ISSUED:	July 27, 2016
REPLACES:	February 13, 2015

Product Information Bulletin

GeoSpec® Lightweight Fill Material Product Data per ASTM D6817

GeoSpec® lightweight fill material is expanded polystyrene (EPS) geofoam used in ground fill applications where a lightweight fill material is required to reduce stresses on underlying or adjoining soils/structures. EPS geofoam has been used in projects involving roads, bridge approach fills, embankments, levees, berms, foundations, landscaping, etc., worldwide for over 50 years.

GeoSpec fill material can be designed to support high compressive loads, but has a density less than 1% of traditional earth materials. It can be designed to meet a wide range of geotechnical engineering specifications with a density range of 11 kg/m^3 (0.7 pcf) to 46 kg/m^3 (2.85 pcf) providing a range of compressive resistance values. The table below provides ***GeoSpec*** fill material properties for type designations as per ASTM D6817, ***Standard Specification for Rigid Cellular Polystyrene Geofoam***.

Material Property[1]	Units	*D6817 GeoSpec* Type Designations[2]						
		EPS12	EPS15	EPS19	EPS22	EPS29	EPS39	EPS46
Product Density *Minimum* *ASTM C303*	kg/m^3 (pcf)	11.2 (0.70)	14.4 (0.90)	18.4 (1.15)	21.6 (1.35)	28.8 (1.80)	38.4 (2.40)	45.7 (2.85)
Compressive Resistance[3] *Minimum @ 1% Strain* *ASTM D1621*	kPa (psi)	15 (2.2)	25 (3.6)	40 (5.8)	50 (7.3)	75 (10.9)	103 (15.0)	128 (18.6)
Flexural Strength *Minimum* *ASTM C203*	kPa (psi)	69 (10)	172 (25)	207 (30)	240 (35)	345 (50)	414 (60)	517 (75)
Limiting Oxygen Index *Minimum* *ASTM D2863*	%	24	24	24	24	24	24	24
Additional Compressive Resistance Properties[4]								
Compressive Resistance *Minimum @ 5% Strain* *ASTM D1621*	kPa (psi)	35 (5.1)	55 (8.0)	90 (13.1)	115 (16.7)	170 (25.0)	241 (35.0)	300 (43.5)
Compressive Resistance *Minimum @ 10% Strain* *ASTM D1621*	kPa (psi)	40 (5.8)	70 (10.2)	110 (16.0)	135 (19.6)	200 (29.0)	276 (40.0)	345 (50.0)

1. GeoSpec lightweight fill material properties are third party certified under a certification program administered by Intertek based upon ASTM D7557, ***Standard Practice for Sampling of Expanded Polystyrene Geofoam Specimens***.
2. The material properties for GeoSpec lightweight fill material are third party certified by Intertek.
3. Compressive resistance at 1% strain is within the elastic limit for the GeoSpec types in the above table and is accepted as the design compressive resistance to limit long-term deformation under structural load.
4. Compressive resistance at 5% and 10% strain in the above table are provided for applications where the intended end-use requires long-term deformation under structural load – i.e., a compressible product.

Copyright © 2016 by Plasti-Fab Ltd. All rights reserved.
Plasti-Fab, PlastiSpan, DuroFoam, DuroFloat, GeoSpec, GeoSpan, GeoVoid, Advantage ICF System and Insulspan are registered trademarks of Plasti-Fab Ltd.
Printed in Canada

GeoGripper® Plate

The Foam-Control® GeoGripper® Plate is a galvanized steel multi-barbed connector. It is used to restrain Foam-Control EPS Geofoam from moving laterally in multi-layer applications. Its single piece two-sided design allows for excellent connection between layers in a one-step application.

- Single Piece, Double Barbed Design
- Galvanized Steel for Durability
- Easy Fast Installation at Site
- Strong Lateral Hold
- Cost Effective

Material and Size

- 4” x 4”
- 0.60” high two sided barbs
- 20 gauge
- G-60 galvanized steel

The GeoGripper Plate is made of galvanized steel for strength and durability. It is sized for easy handling and job site installation. The barbs are sized to pierce the rigid foam and hold tight, yet not create a significant danger to the applicator.

Applications

The sharp barbs pierce quickly and firmly into rigid-foams. The unique barb pattern locks the plate into place. The succeeding EPS Geofoam material seats firmly over the gripper plate. The EPS Geofoam is now held against horizontal movement and work activities can proceed over top of the in-place layers.

EPS GEOFOAM ACCESSORY

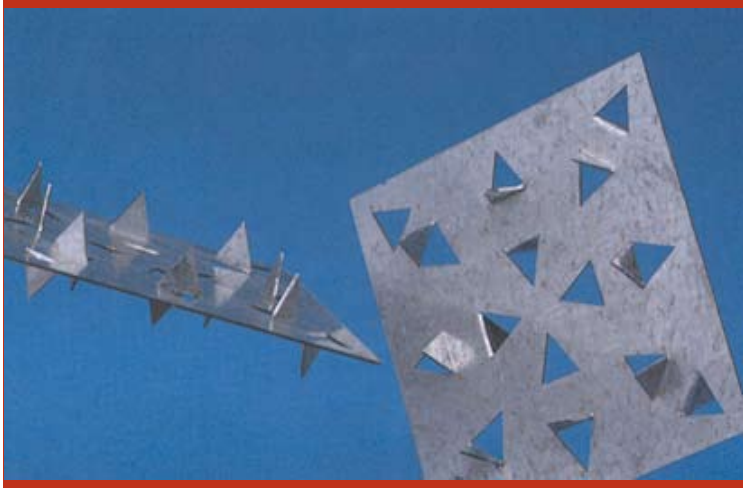

CONTROL, NOT COMPROMISE.®

Foam-Control EPS GeoGripper Plates are engineered and manufactured to give you control over your project installation.

- Small size for easy handling
- Prevents block sliding during installation
- Works in all weather
- Quick and easy installation
- Galvanized for durability

Design

Each plate has a design lateral holding strength of 60 lbs (tested with ASTM D6817 Type EPS15 Geofoam, with a safety factor of two).

Each project is unique. Therefore, it is the responsibility of the designer/applicator to calculate the load requirements of the project for determining the proper number of GeoGripper plates needed.

Two GeoGripper plates for each 4' x 8' section of rigid foam material is a minimum recommendation.

Installation

Place GeoGripper Plates as shown on plans and specifications. Press firmly into the rigid foam until the plate is flush with the surface. A 1" dowel rod can be used as a cost-effective setting tool. Position the top layer of rigid foam as specified. Walk on the top layer of rigid foam material, seating it firmly downward before other work commences.

Ready to take control? Start here.

If you're starting to wonder how Foam-Control Geofoam can contribute to your next project, here's how to find out: Just contact your nearest Foam-Control Geofoam manufacturer. They'll be happy to give you a design consultation, information about Foam-Control Geofoam products, pricing, and the answers to all your questions.

Specifications and Installation Guidelines.

Contact a sales rep and download Foam-Control EPS Geofoam documentation at www.geofoam.com. Please consult Foam-Control EPS Geofoam TechData for complete specifications and installation guidelines.

ENERGY STAR PARTNER

AFM CORPORATION FOAM CONTROL

Foam-Control EPS products are manufactured by AFM Corporation licensees.

Copyright © 2011 AFM Corporation. All rights reserved. Printed in USA. GeoGripper, Foam-Control, and Control, Not Compromise are trademarks of AFM Corporation, Lakeville, MN.

GF02-01/11

FOAM CONTROL® EPS

CONTROL, NOT COMPROMISE.®

Technical Data and Specifications for

XR® Geomembranes

XR-3®
XR-5®
XR-3® PW

Industrial, Municipal and Potable Water Grade Geomembranes

Seaman Corporation
1000 Venture Blvd.
Wooster, Ohio 44691
(330) 262-1111
www.xr-5.com

Copyright 2007

Section 1: Product Overview/Applications
Product Application Chart

Section 2: Physical Properties
Part 1: Material Specifications
8130/8138 XR-5
6730 XR-5
8228 XR-3
8130 XR-3 PW

Part 2: Elongation Properties
8130/8138 XR-5
6730 XR-5
8228 XR-3

Section 3: Chemical/Environmental Resistance
Part 1: Chemical Resistance
XR-5 Chemical Resistance
Chemical Resistance Chart
Vapor Transmission Data
Seam Strength
Long Term Seam Adhesion
Fuel Compatibility
XR-3 Chemical Resistance Statement (Summary)
Part 2: Comparative Chemical Resistance (XR-5)
Part 3: Weathering Resistance

Section 4: Comparative Physical Properties
XR-5/HDPE Physicals - Comparative Properties
XR-5/Polypropylene Tensile
Puncture Strength Comparison
Coated Fabric Thermal Stability

Section 5: Sample Specifications

Section 6: Warranty Information

Seaman Corp. XR Geomembranes

Section 1 - Product Overview/Applications

- All XR Geomembrane products are classified as an Ethylene Interpolymer Alloy (EIA)
- XR-5 grade is high strength and chemically resistant for maximum resistance to high temperature, and broad chemical resistance, including acids, oils and methane
- XR-3 grade for moderate chemical resistant requirement applications such as stormwater and domestic wastewater
- NSF 61 approved XR-3 PW grade for potable water contact
- Heat weldable-thermal weldable for seams as strong as the membrane. Factory panels over 15,000 square feet (1400 sq meters) for less field seaming
- Stability is excellent, with low thermal expansion-contraction properties
- 30+ year application history

Product Application Chart

	XR-5			XR-3	XR-3 PW
	8130	**8138**	**6730**	**8228**	**8130**
High Puncture Resistance	X	X	X		X
UV Resistance	X	X	X	X	X
High Strength Applications	X	X	X		X
Floating Covers (Nonpotable)	X	X	X	X	
Diesel/Jet Fuel Containment	X	X	X		
Industrial Wastewater	X	X	X		
Stormwater	X	X	X	X	
Municipal/Domestic Wastewater	X	X	X	X	
Floating Diversion Baffles/Curtains	X		X		X
Potable Water					X
<-65 Deg F Applications	Contact Seaman Corp.				
Chemically Resistant Applications	X	X	X		

XR-5® is a registered trademark of Seaman Corporation
XR-3® is a registered trademark of Seaman Corporation
XR® is a registered trademark of Seaman Corporation

Section 2 - Physical Properties

Part 1- Material Specifications

Property	Test Method	8130 XR-5	8138 XR-5	6730 XR-5
Base Fabric Type Base Fabric Weight	ASTM D 751	Polyester 6.5 oz/yd^2 nominal (220 g/m^2 nominal)	Polyester 6.5 oz/yd^2 nominal (220 g/m^2 nominal)	Polyester 7 oz/yd^2 nominal (235 g/m^2 nominal)
Thickness	ASTM D 751	30 mils min. (0.76 mm min.)	40 mils nom. (1.0 mm nom.)	30 mils min. (0.76 mm min.)
Weight	ASTM D 751	30.0 +- 2 oz/sq yd (1017 +- 2 g/m^2)	38.0 +- 2 oz/sq yd (1288 +- 70 g/m^2)	30.0 +- 2 oz/sq yd (1017 +- 70 g/m^2)
Tear Strength	ASTM D 751 Trap Tear	40/55 lbs. min. (175/245 N min.)	40/55 lbs. min. (175/245 N min.)	
Breaking Yield Strength	ASTM D 751 Grab Tensile	550/550 lbs. min. (2,447/2,447 N min.)	550/550 lbs. min. (2,447/2,447 N min.)	600/550 lbs. min. (2,670/2,447 N min.)
Low Temperature Resistance	ASTM D 2136 4 hrs-1/8" Mandrel	Pass @ -30° F Pass @ -35° C	Pass @ -30° F Pass @ -35° C	Pass @ -30° F Pass @ -35° C
Dimensional Stability	ASTM D 1204 100° C-1 Hr.	0.5% max. each direction	0.5% max. each direction	0.5% max. each direction
Hydrostatic Resistance	ASTM D 751 Procedure A	800 psi min. (5.51 MPa min.)	800 psi min. (5.51 MPa min.)	800 psi min. (5.51 MPa min.)
Blocking Resistance	ASTM D 751 180° F	#2 Rating max.	#2 Rating max.	#2 Rating max.
Adhesion-Ply	ASTM D 413 Type A	15 lbs./in. min. or film tearing bond (13 daN/5 cm min. or FTB)	15 lbs./in. min. or film tearing bond (13 daN/5 cm min. or FTB)	15 lbs./in. min. or film tearing bond (13 daN/5 cm min. or FTB)
Adhesion (minimum) Heat Welded Seam	ASTM D 751 Dielectric Weld	40 lbs./2in. RF weld min. (17.5 daN/5 cm min.)	40 lbs./2in. RF weld min. (17.5 daN/5 cm min.)	15 lbs./in. RF weld min. (15 daN/5 cm min.)
Dead Load Seam Strength	ASTM D 751, 4-Hour Test	Pass 220 lbs/in @ 70° F (Pass 980 N/2.54 cm @ 21° C) Pass 120 lbs/in @ 160° F (Pass 534 N/2.54 cm @ 70° C)	Pass 220 lbs/in @ 70° F (Pass 980 N/2.54 cm @ 21° C) Pass 120 lbs/in @ 160° F (Pass 534 N/2.54 cm @ 70° C)	
Bonded Seam Strength	ASTM D 751 Procedure A, Grab Test Method	550 lbs. min. (2,450 N min.)	550 lbs. min. (2,450 N min.)	550 lbs. min. (2,560 N min.)

Abrasion Resistance	ASTM D 3389 H-18 Wheel 1 kg Load	2,000 cycles min. before fabric exposure, 50 mg/100 cycles max. weight loss	2,000 cycles min. before fabric exposure, 50 mg/100 cycles max. weight loss	2,000 cycles min. before fabric exposure, 50 mg/100 cycles max. weight loss
Weathering Resistance	Carbon-Arc ASTM G 153	8,000 hours min. with no appreciable changes or stiffening or cracking of coating	8000 hours min. with no appreciable change or stiffening or cracking of coating	8000 hours min. with no appreciable change or stiffening or cracking of coating
Water Absorption	ASTM D 471, Section 12 7 Days	0.025 kg/m^2 max. @70° F/21° C 0.14 kg/m^2 max at 212° F/100° C	0.025 kg/m^2 max. @70° F/21° C 0.14 kg/m^2 max at 212° F/100° C	0.025 kg/m^2 max. @70° F/21° C 0.14 kg/m^2 max at 212° F/100° C
Wicking	ASTM D 751	1/8" max (0.3 cm max)	1/8" max. (0.3 cm max.)	1/8" max. (0.3 cm max.)
Bursting Strength	ASTM D 751 Ball Tip	750 lbs. min. (3,330 N min.)	750 lbs. min. (3,330 N min.)	750 lbs. min. (3,330 N min.)
Puncture Resistance	ASTM D 4833	275 lbs. min. 1,200 N min.	275 lbs. min. 1,200 N min.	275 lbs. min. 1,200 N min.
Coefficient of Thermal Expansion/ Contraction	ASTM D 696	8 x 10^{-6} in/in/° F max. (1.4 x 10^{-5} cm/cm/° C max.)	8 x 10^{-6} in/in/° F max. (1.4 x 10^{-5} cm/cm/° C max.)	8 x 10^{-6} in/in/° F max. (1.4 x 10^{-5} cm/cm/° C max.)
Environmental/Chemical Resistant Properties		See Chemical Resistance Table, Page 8	See Chemical Resistance Table, Page 8	See Chemical Resistance Table, Page 8
Puncture Resistance	FED-STD-101C Method 2031	350 lbs. (approx.)	350 lbs. (approx.)	
Cold Crack	ASTM D 2136 4 Hrs, 1/8" Mandrel	Pass at -30° F/-34° C	Pass @ -30° F/-34° C	Pass @ -30° F/-34° C

Section 2 - Physical Properties

Part 1- Material Specifications (cont.)

Property	Test Method	8130 XR-3 PW	8228 XR-3
Base Fabric Type Base Fabric Weight	ASTM D 751	Polyester 6.5 oz/yd^2 nominal (220 g/m^2 nominal)	Polyester 3.0 oz/yd^2 nominal (100 g/m^2 nominal)
Thickness	ASTM D 751	30 mils min. (0.76 mm min.)	30 mils min. (0.76 mm min.)
Weight	ASTM D 751	30.0 +- 2 oz./sq. yd. (1017 +- 70 g/sq. m)	28.0 +- 2 oz./sq. yd. (950 +- 70 g/sq. m)
Tear Strength	ASTM D 751 Trap Tear	40/55 lbs. min. (175/245 N min.)	30/30 lbs. nom. (133/133 N nom.)
Breaking Yield Strength	ASTM D 751 Grab Tensile	550/550 lbs. min. (2,447/2447 N min.)	250/200 lbs. min. (1,110/890 N min.)
Low Temperature Resistance	ASTM D 2136 4hrs-1/8" Mandrel	Pass @ -30° F (Pass @ -35° C)	Pass @ -25° F (Pass @ -32° C)
Dimensional Stability	ASTM D 1204 100° C-1 hr.	0.5% max. each direction	5% max. each direction
Hydrostatic Resistance	ASTM D 751 Method A	800 psi min. (5.51 MPa min.)	300 psi min. (2.07 MPa min.)
Blocking Resistance	ASTM D 751 180° F	#2 Rating max.	#2 Rating max.
Adhesion-Ply	ASTM D 413 Type A	15 lbs./in. min. or film tearing bond (13 daN/5 cm min. or FTB)	12 lbs./in. (approx.) (10 daN/5 cm approx.)
Adhesion- Heat Welded Seam	ASTM D 751 Dielectrc Weld	40 lbs./2in. min. (17.5 daN/5 cm min.)	10 lbs./in min. (9 daN/5 cm min.)
Dead Load Seam Strength	ASTM D 751, 4-Hour Test	Pass 220 lbs/in. @ 70° F (Pass 980 N/2.54 cm @ 21° C) Pass 120 lbs/in. @ 160° F (Pass 534 N/2.54 cm @ 70° C)	Pass 100 lbs/in @ 70° F (Pass 445 N @ 21° C) Pass 50 lb @ 160° F (Pass 220 N @ 70° C)
Bonded Seam Strength	ASTM D 751 Procedure A, Grab Test Method	550 lbs. min. (2,450 N min.)	250 lbs. (approx.) (1,112 N min.)

Abrasion Resistance	ASTM D 3389 H-18 Wheel 1 kg Load	2000 cycles min. before fabric exposure, 50 mg/100 cycles max. weight loss	2000 cycles min.
Weathering Resistance	ASTM G 153	8000 hours min. with no appreciable change or stiffening or cracking of coating	8000 hours min.
Water Absorption	ASTM D 471, Section 12 7 Days	0.025 kg/m^2 max. @ 70° F/21° C 0.14 kg/m^2 max @ 212° F/100° C	0.05 kg/m^2 max. @ 70° F/21° C (approx.) 0.28 kg/m^2 max. @ 212° F/100° C (approx.)
Wicking	ASTM D 751	1/8" max. (0.3 cm max.)	1/8" max (0.3 cm max.)
Bursting Strength	ASTM D 751 Ball Tip	750 lbs. min. (3330 N min.)	350 lbs. (approx.) (1557 N min.)
Puncture Resistance	ASTM D 4833	275 lbs. min. 1200 N min.	50 lb typ. (225 N typ.)
Coefficient of Thermal Expansion/ Contraction	ASTM D 696	8 x 10^{-6} in/in/° F max. (1.4 x 10^{-5} cm/cm/° C max.)	8 x 10^{-6} in/in/° F max. (approx.) (1.4 x 10^{-5} cm/cm/° C max. approx.)
Environmental/Chemical Resistant Properties	ASTM D 741 7-Day Total Immersion With Exposed Edges	NSF 61 approved for potable water	Crude oil 5% max. weight gain Diesel fuel 5% max. weight gain
Puncture Resistance	FTMS 101C Method 2031	350 lbs. (approx.)	205 lbs. (approx.)
Tongue Tear	ASTM D 751		50 lbs. (approx.)

Part 2 - Elongation Properties Test

8130 XR-5

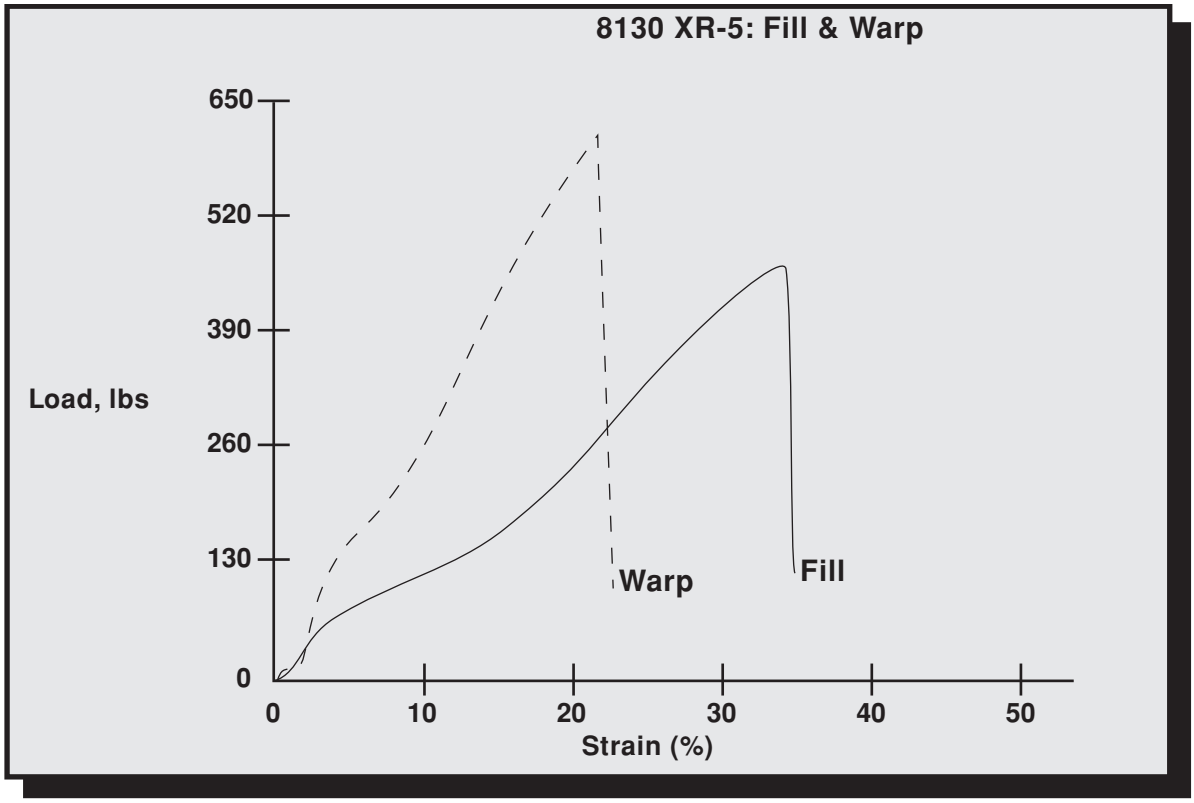

Part 2 - Elongation Properties Test

6730 XR-5

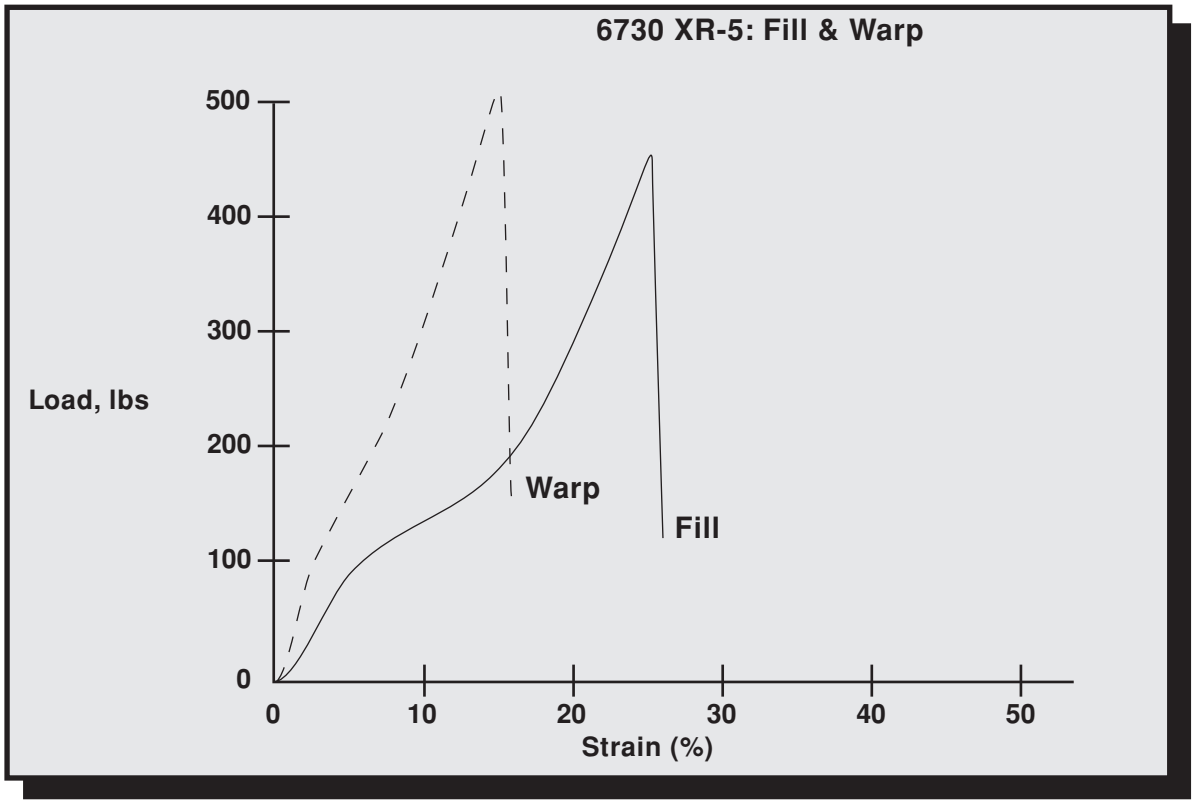

Part 2 - Elongation Properties Test

8228 XR-3

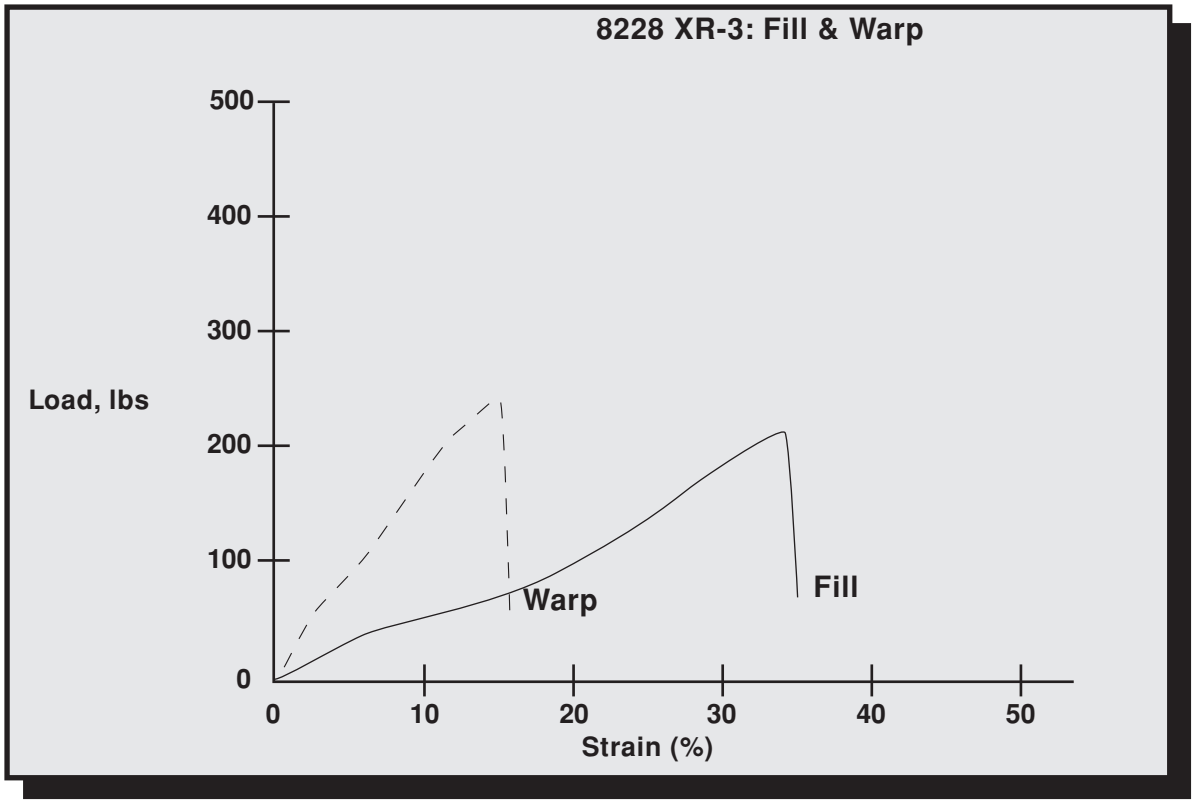

Section 3 - Chemical/Environmental Resistance

Part 1 - XR-5® Fluid Resistance Guidelines

The data below is the result of laboratory tests and is intended to serve only as a guide. No performance warranty is intended or implied. The degree of chemical attack on any material is governed by the conditions under which it is exposed. Exposure time, temperature, and size of the area of exposure usually varies considerably in application, therefore, this table is given and accepted at the user's risk. Confirmation of the validity and suitability in specific cases should be obtained. Contact a Seaman Corporation Representative for recommendation on specific applications.

When considering XR-5 for specific applications, it is suggested that a sample be tested in actual service before specification. Where impractical, tests should be devised which simulate actual service conditions as closely as possible.

EXPOSURE	RATING	EXPOSURE	RATING
AFFF	A	JP-4 Jet Fuel	A
Acetic Acid (5%)	B	JP-5 Jet Fuel	A
Acetic Acid (50%)	C	JP-8 Jet Fuel	A
Ammonium Phosphate	T	Kerosene	A
Ammonium Sulfate	T	Magnesium Chloride	T
Antifreeze (Ethylene Glycol)	A	Magnesium Hydroxide	T
Animal Oil	A	Methanol	A
Aqua Regia	X	Methyl Alcohol	A
ASTM Fuel A (100% Iso-Octane)	A	Methyl Ethyl Ketone	X
ASTM Oil #2 (Flash Pt. 240° C)	A	Mineral Spirits	A
ASTM Oil #3	A	Naphtha	A
Benzene	X	Nitric Acid (5%)	B
Calcium Chloride Solutions	T	Nitric Acid (50%)	C
Calcium Hydroxide	T	Perchloroethylene	C
20% Chlorine Solution	A	Phenol	X
Clorox	A	Phenol Formaldehyde	B
Conc. Ammonium Hydroxide	A	Phosphoric Acid (50%)	A
Corn Oil	A	Phosphoric Acid (100%)	C
Crude Oil	A	Phthalate Plasticizer	C
Diesel Fuel	A	Potassium Chloride	T
Ethanol	A	Potassium Sulphate	T
Ethyl Acetate	C	Raw Linseed Oil	A
Ethyl Alcohol	A	SAE-30 Oil	A
Fertilizer Solution	A	Salt Water (25%)	B
#2 Fuel Oil	A	Sea Water	A
#6 Fuel Oil	A	Sodium Acetate Solution	T
Furfural	X	Sodium Bisulfite Solution	T
Gasoline	B	Sodium Hydroxide (60%)	A
Glycerin	A	Sodium Phosphate	T
Hydraulic Fluid- Petroleum Based	A	Sulphuric Acid (50%)	A
Hydraulic Fluid- Phosphate		Tanic Acid (50%)	A
Ester Based	C	Toluene	C
Hydrocarbon Type II (40% Aromatic)	C	Transformer Oil	A
Hydrochloric Acid (50%)	A	Turpentine	A
Hydrofluoric Acid (5%)	A	Urea Formaldehyde	A
Hydrofluoric Acid (50%)	A	UAN	A
Hydrofluosilicic Acid (30%)	A	Vegetable Oil	A
Isopropyl Alcohol	T	Water (200°F)	A
Ivory Soap	A	Xylene	X
Jet A	A	Zinc Chloride	T

Ratings are based on visual and physical examination of samples after removal from the test chemical after the samples of Black XR-5 were immersed for 28 days at room temperature. Results represent ability of material to retain its performance properties when in contact with the indicated chemical.

Rating Key:
A – Fluid has little or no effect
B – Fluid has minor to moderate effect
C – Fluid has severe effect
T – No data - likely to be acceptable
X – No data - not likely to be acceptable

Vapor Transmission Data

Tested according to ASTM D814-55 Inverted Cup Method

Perhaps a more meaningful test is determination of the diffusion rate of the liquid through the membrane. The vapor transmission rate of Style 8130 XR-5® to various chemicals was determined by the ASTM D814-55 inverted cup method. All tests were run at room temperature and results are shown in the table.

Chemical	8130 XR-5 Black g/hr/m2
Water	0.11
#2 Diesel Fuel	0.03
Jet A	0.11
Kerosene	0.15
Hi-Test Gas	1.78
Ohio Crude Oil	0.03
Low-Test Gas	5.25
Raw Linseed Oil	0.01
Ethyl Alcohol	0.23
Naphtha	0.33
Perchlorethylene	38.58
Hydraulic Fluid	0.006
100% Phosphoric Acid	7.78
50% Phosphoric Acid	0.43
Ethanol (E-96)	0.65
Transformer Oil	0.005
Isopropyl Alcohol	0.44
JP4 (E-96)	0.81
JP8 (E-96)	0.42
Fuel B (E-96)	6.28
Fuel C (E-96)	7.87

Note: The tabulated values are measured Vapor Transmission Rates (VTR). Normal soil testing methods to determine permeability are impractical for synthetic membranes. An "equivalent hydraulic" permeability coefficient can be calculated but is not a direct units conversion. Contact Seaman Corporation for additional technical information.

Seam Strength

Style 8130 XR-5 Black Seam Strength After Immersion

Two pieces of Style 8130 were heat sealed together (seam width 1 inch overlap) and formed into a bag. Various oils and chemicals were placed in the bags so that the seam area was entirely covered. After 28 days at room temperature, the chemicals were removed and one inch strips were cut across the seam and the breaking strength immediately determined. Results are listed below.

Chemical	Seam Strength
None	340 Lbs. Fabric Break- No Seam Failure
Kerosene	355 Lbs. Fabric Break- No Seam Failure
Ohio Crude Oil	320 Lbs. Fabric Break- No Seam Failure
Hydraulic Fluid- Petroleum Based	385 Lbs. Fabric Break- No Seam Failure
Toluene	0 Lbs. Adhesion Failure
Naphtha	380 Lbs. Fabric Break- No Seam Failure
Perchloroethylene	390 Lbs. Fabric Break- No Seam Failure

Even though 1-inch overlap seams are used in the tests to study the accelerated effects, it is recommended that XR-5 be used with a 2-inch nominal overlap seam in actual application. In some cases where temperatures exceed 160°F and the application demands extremely high seam load, it may be necessary to use a wider width seam.

Long Term Seam Adhesion

11 Years Immersion
ASTM D 751
Lbs./In.

Seam samples of 8130 XR-5® were dielectrically welded together and totally immersed in the liquids for 11 years. The samples were taken out, dried for 24 hours and visually observed for any signs of swelling, cracking, stiffening or degradation of the coating. The coating showed no appreciable degradation and no stiffening, swelling, cracking or peeling.

The adhesion, or resistance to separation of the coating from the base cloth, was then measured by ASTM D 751. Results show 8130 XR-5 maintains seam strength over this long period (11 years).

	Control	Crude Oil	JP-4 Jet Fuel	Diesel Fuel	Kerosene	Naphtha
8130 XR-5	20+	18	33	25	40	33*

Values in lbs./in.

*The naphtha sample was sticky.

We believe this information is the best currently available on the subject. We offer it as a suggestion in any appropriate experimentation you may care to undertake. It is subject to revision as additional knowledge and experience are gained. We make no guarantee of results and assume no obligation or liability whatsoever in connection with this information.

Fuel Compatibility - Long Term Immersion

Test: Samples of 8130 XR-5® Black were immersed in Diesel Fuel, JP-4 Jet Fuel, Crude Oil, Kerosene, and Naphtha for 6 1/2 years.

The samples were then taken out of the test chemicals, blotted and dried for 24 hours. The samples were observed for blistering, swelling, stiffening, cracking or delamination of the coating from the fiber.

Results: It was found in all cases that the 8130 XR-5, after immersion for six years, maintained its strength and there was no evidence of blistering, swelling, stiffening, cracking or delamination.

The strip tensile strength, or breaking strength, of the samples was measured after six years of immersion and the following are the results.

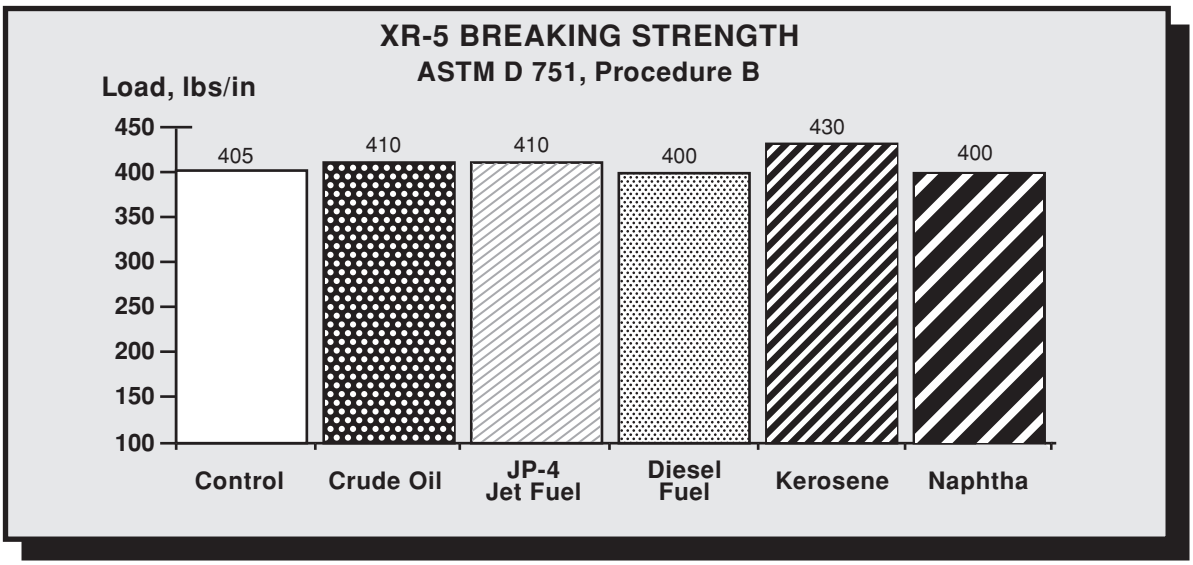

XR-3 Chemical Resistance Statement (Summary)

XR-3® is recommended for moderate chemical resistant applications such as stormwater and municipal wastewater and is not recommended for prolonged contact with pure solutions. XR-3 PW® membranes are recommended only for contact with drinking water and are resistant to low levels of chlorine found in drinking water. XR-5 has a broad range of chemical resistance which is detailed in this section.

Part 2: XR-5® Comparative Chemical Resistance

Chemical Resistance Chart

Comparative Chemical Resistance

	XR-5	HDPE	PVC	Hypalon	Polypropylene
Kerosene	A	B	C	C	C
Diesel Fuel	A	A	C	C	C
Acids (General)	A	A	A	B	A
Naphtha	A	A	C	B	C
Jet Fuels	A	A	C	B	C
Saltwater, 160° F	A	A	C	B	A
Crude Oil	A	B	C	B	C
Gasoline	B	B	C	C	C

A= Excellent B= Moderate C= Poor

Source: Manufacturer's Literature

XR-5 data based on conditions detailed in Section 3, Part 1.

Part 3: Weathering Resistance

Accelerated Weathering Test

XR-5 has been tested in the carbon arc weatherometer for over 10,000 hours of exposure and in the Xenon weatherometer for over 12,000 hours of exposure. The sample showed no loss in flexibility and no significant color change. Based on field experience of Seaman Corporation products and similar weatherometer exposure tests, XR-5 should have an outdoor weathering life significantly longer than competitive geomembranes, particularly in tropical or subtropical applications.

EMMAQUA Testing: ASTM E-838-81 was performed on a modified form of XR-5, FiberTite, used in the single-ply roofing industry. After 3 million Langleys in Arizona, no signs of degradation were noted with no evidence of cracking, blistering, swelling or adhesion delamination failure of the coating.

Natural Exposure

After over 17 years as a holding basin at a large oil company in the Texas desert, XR-5 showed no signs of environmental stress cracking, thermal expansion/contraction, or low yield strength problems. Temperature ranges from near zero to over 100° F.

In service approximately 17 years in a solar pond application at a research facility in Ohio, UV exposed samples, as well as immersed samples, retained over 90% of the tensile strength. Examination of the material determined there was little effect on the coating compound. The solar pond was exposed to temperatures from below zero to over 100° F.

XR5 was exposed for 12½ years in Sarasota, Florida, on a weathering rack, facing the southern direction at 45°. No significant color loss, cracking, crazing, blistering, or adhesion delamination failure of the coating was noted.

Section 4 - Comparative Physical Properties

XR-5/HDPE Comparative Properties

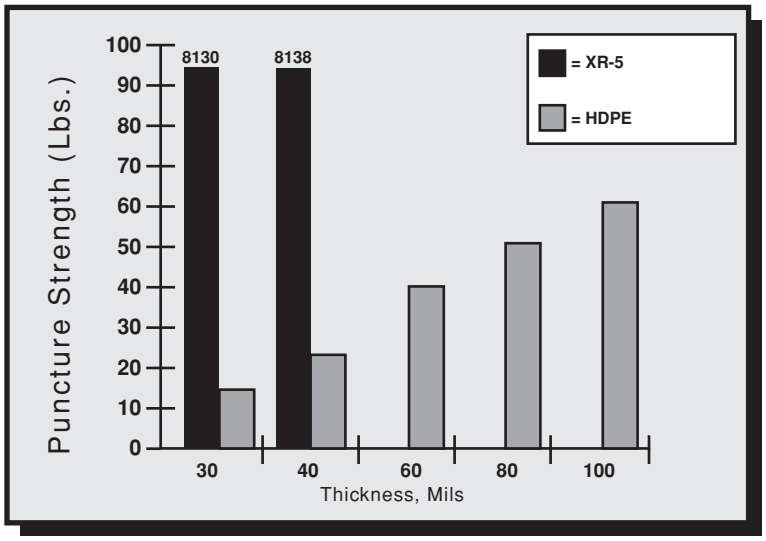

Puncture Resistance

1. ASTM D 751, Screwdriver Tip, 45° Angle (Room Temperature) Puncture Resistance, XR5 vs. HDPE

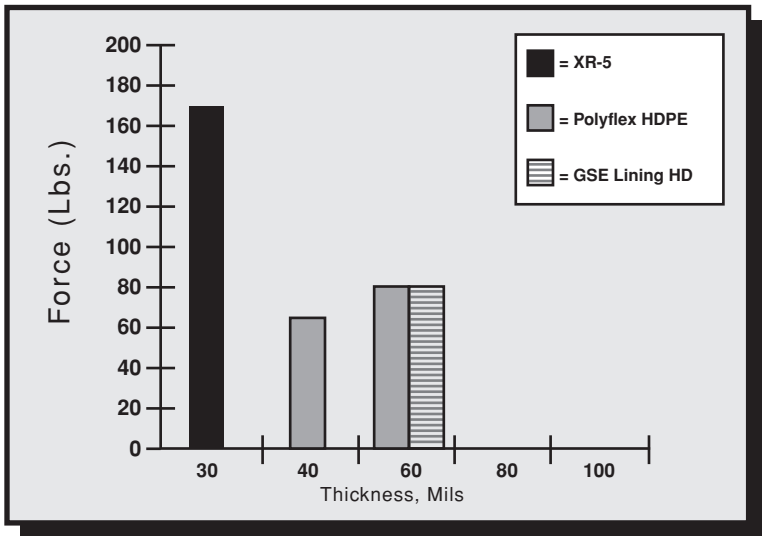

2. FED-STD-101C Method 2065 (Room Temperature)*

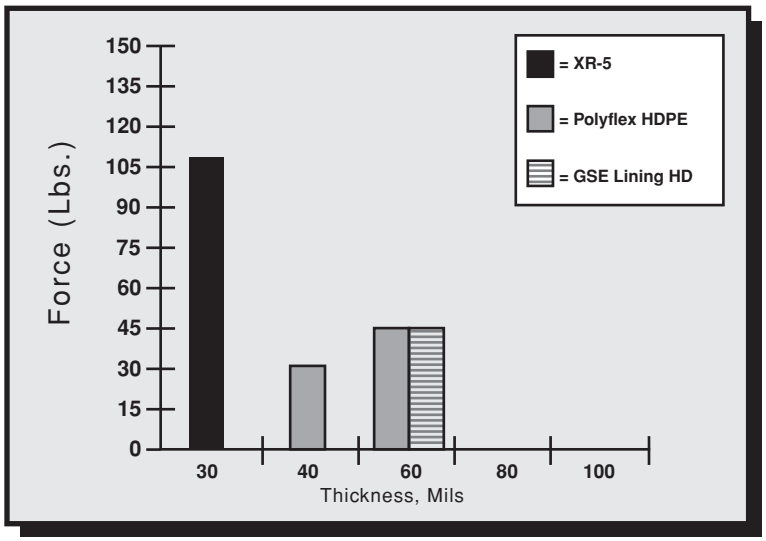

3. FED-STD-101C Method 2065 (70°C)*

* Data provided by E.I. DuPont de Nemours & Co. Wilmington, Delaware

GSE is a registered trademark of GSE Lining Technology, Inc.

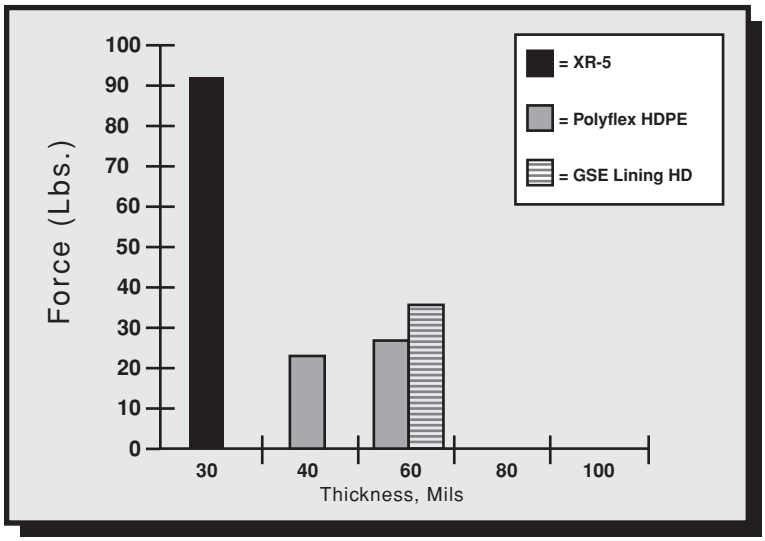

4. FED-STD-101C Method 2065 (100ºC)*

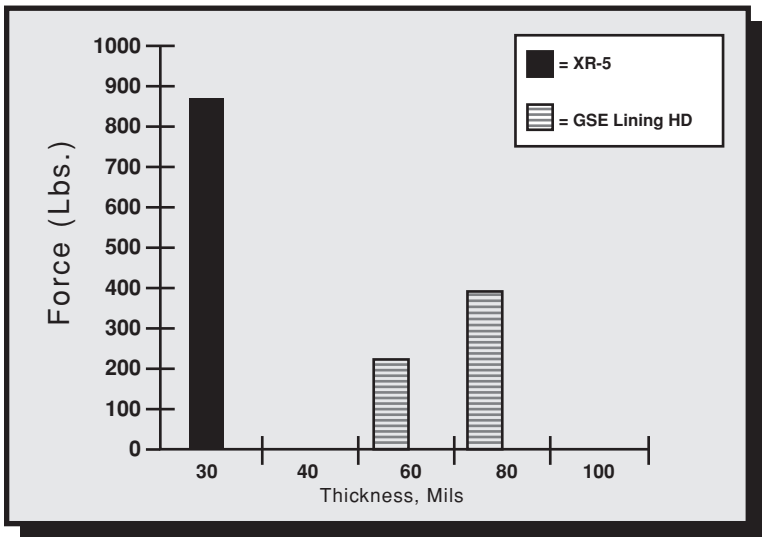

5. ASTM D 751 Ball Burst Puncture

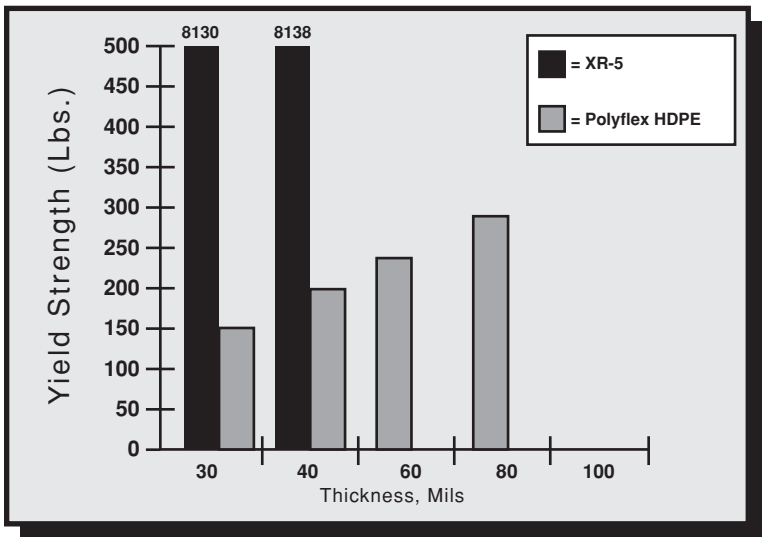

Yield Strength

1. Yield Strength, XR-5 vs. HDPE

Test Method: Grab Tensile, ASTM D 751, 70º C

* Data provided by E.I. DuPont de Nemours & Co. Wilmington, Delaware

GSE is a registered trademark of GSE Lining Technology, Inc.

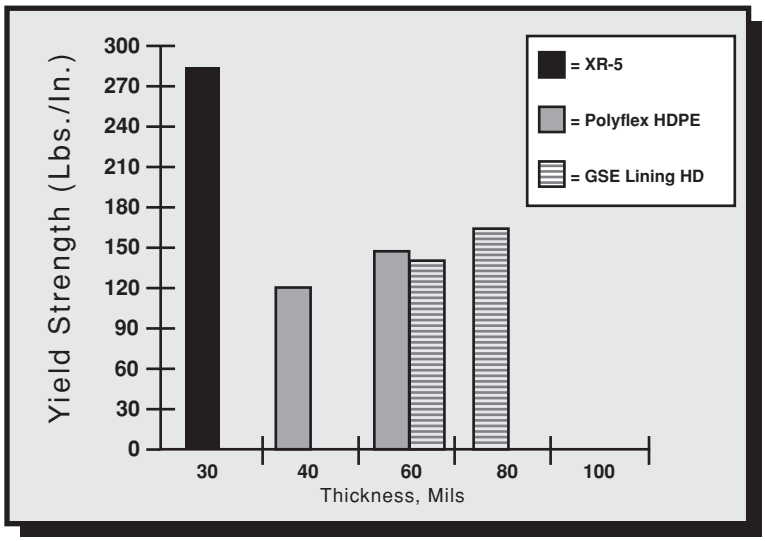

2. Strip Tensile, ASTM D 751, Room Temperature*

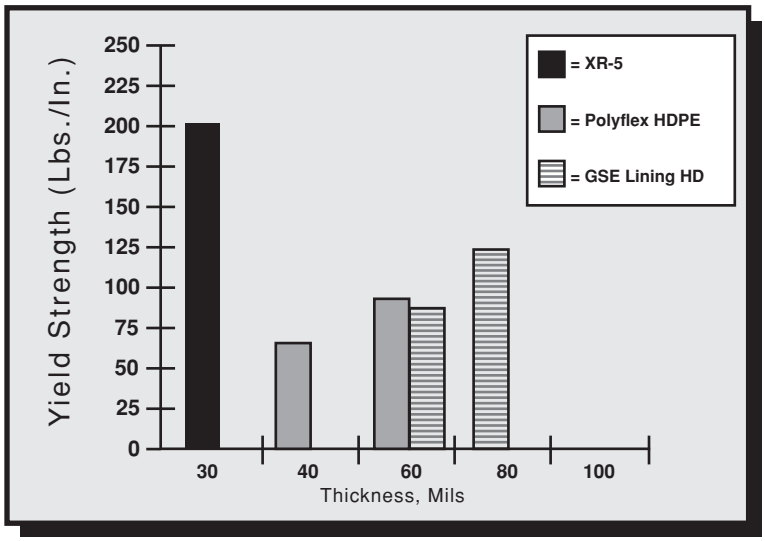

3. Strip tensile, ASTM D 751, 70ºC*

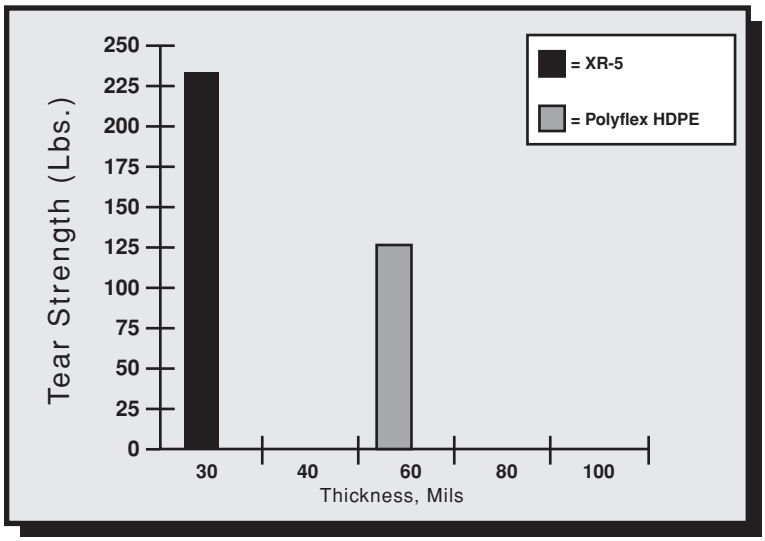

Tear Strength

1. Tongue Tear (8" x 10" Specimens), ASTM D 751, Room Temperature*

* Data provided by E.I. DuPont de Nemours & Co. Wilmington, Delaware

GSE is a registered trademark of GSE Lining Technology, Inc.

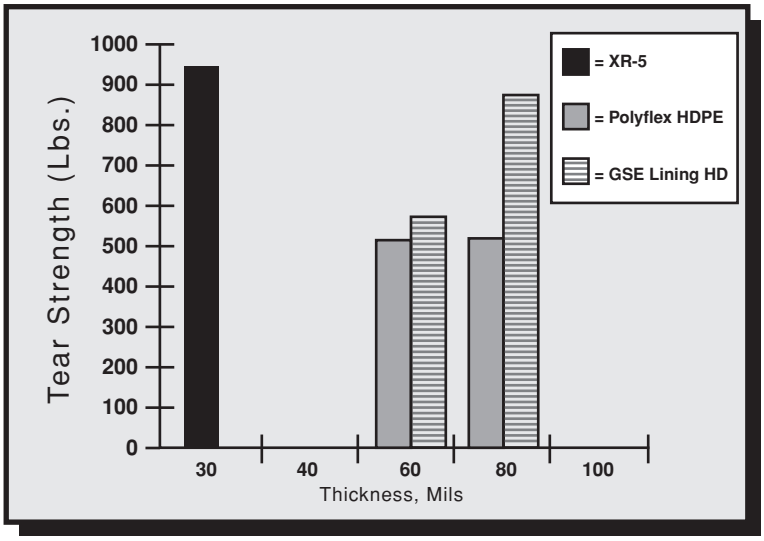

1. Graves Tear, ASTM D 624, Die C, Room Temperature*

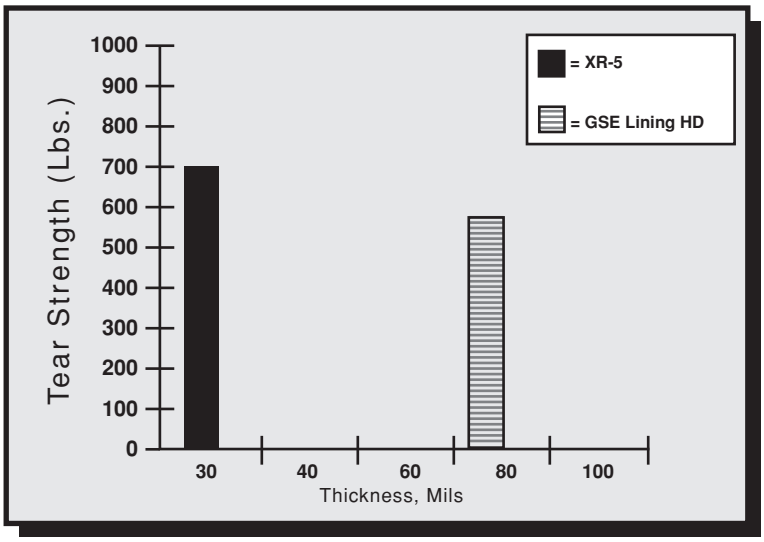

2. Graves Tear, ASTM D 624, Die C, 70°C*

* Data provided by E.I. DuPont de Nemours & Co. Wilmington, Delaware

GSE is a registered trademark of GSE Lining Technology, Inc.

Grab Strength – XR-5® vs. Polypropylene Tensile

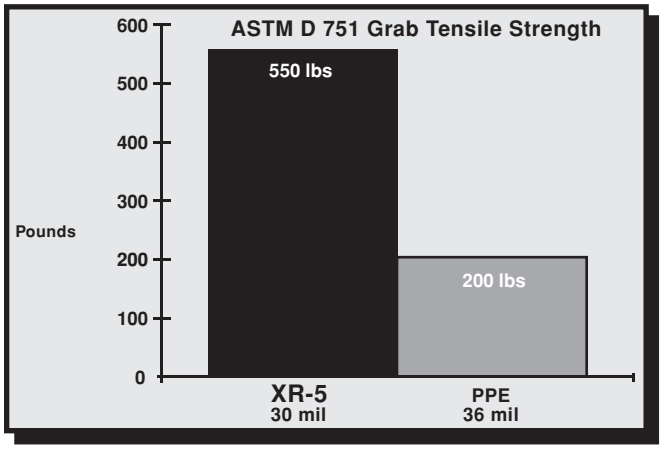

Puncture Strength Comparison

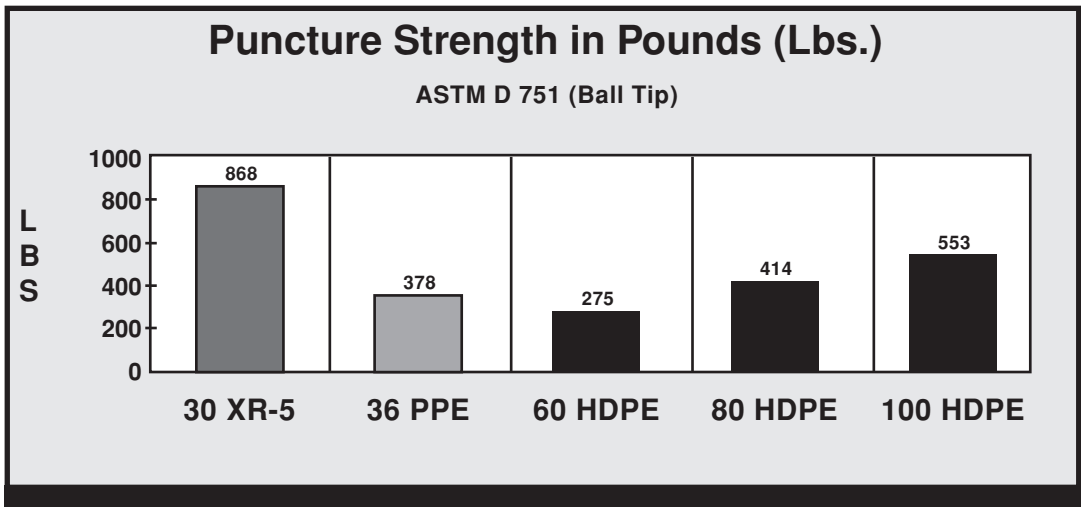

Coated Fabric Thermal Stability

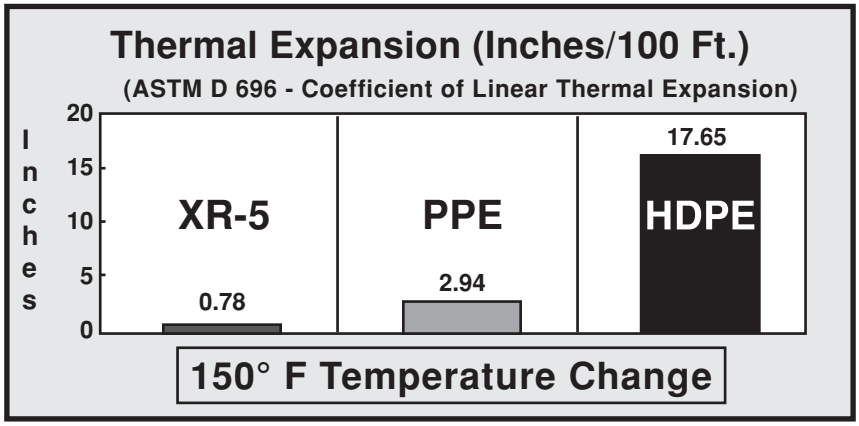

Specification For Geomembrane Liner

(Sample specification: 8130 XR-5®. For other product specifications, go to www.xr-5.com)

General

1.01 Scope Of Work

Furnish and install flexible membrane lining in the areas shown on the drawings. All work shall be done in strict accordance with the project drawings, these specifications and membrane lining fabricator's approved shop drawings.

Geomembrane panels will be supplied sufficient to cover all areas, including appurtenances, as required in the project, and shown on the drawings. The fabricator/installer of the liner shall allow for shrinkage and wrinkling of the field panels.

1.02 Products

The lining material shall be 8130 XR-5 as manufactured by Seaman Corporation (1000 Venture Boulevard, Wooster, OH 44691; 330-262-1111), with the following physical specifications:

Base- (Type)	Polyester
Fabric Weight (ASTM D 751)	6.5 oz./sq. yd.
Finished Coated Weight (ASTM D 751)	30 ± 2 oz./sq. yd.
Trapezoid Tear (ASTM D 751)	40/55 lbs. min.
Grab Yield Tensile (ASTM D 751, Grab Method Procedure A)	550/550 lbs. min.
Elongation @ Yield (%)	20% min.
Adhesion- Heat Seam (ASTM D 751, Dielectric Weld)	40 lbs./2in. weld min.
Adhesion- Ply (ASTM D 413, Type A)	15 lbs./in. or film tearing bond
Hydrostatic Resistance (ASTM D 751, Method A)	800 psi min.
Puncture Resistance (ASTM D 4833)	275 lbs. min.
Bursting Strength (ASTM D 751 Ball Tip)	750 lbs. min.
Dead Load (ASTM D 751) Room Temperature	220 lbs. min.
(2" overlap seam, 4 hours) 160ºF	120 lbs. min.
Bonded Seam Strength (ASTM D 751 Grab Test Method, Procedure A)	575 lbs. min.
Low Temperature (ASTM D 2136, 4 hours- 1/8" Mandrel)	Pass @ -30ºF
Weathering Resistance ASTM G 153 Carbon Arc	8,000 hours min. With no appreciable changes or stiffening or cracking of coating
Dimensional Stability (ASTM D 1204, 212ºF 1 Hour, Each Direction)	0.5% max.
Water Absorption (ASTM D 471, 7 Days)	0.025 kg/m^2 max. @ 70ºF 0.14 kg/m^2 max. @ 212ºF
Abrasion Resistance ASTM D 3389,	2000 cycles before fabric exposure;
H-18 Wheel, 1000 g load	50 mg/100 cycles max. wgt. Loss
Coefficient of Thermal Expansion/Contraction (ASTM D 696)	8×10^{-6} in/in/º F max.

1.03 Submittals

The fabricator of panels used in this work shall prepare shop drawings with a proposed panel layout to cover the liner area shown in the project plans. Shop drawings shall indicate the direction of factory seams and shall show panel sizes consistent with the material quantity requirements of 1.01.

Details shall be included to show the termination of the panels at the perimeter of lined areas, the methods of sealing around penetrations, and methods of anchoring.

Placement of the lining shall not commence until the shop drawings and details have been approved by the owner, or his representative.

1.04 Factory Fabrication
The individual XR-5® liner widths shall be factory fabricated into large sheets custom designed for this project so as to minimize field seaming. The number of factory seams must exceed the number of field seams by a factor of at least 10.

A two-inch overlap seam done by heat or RF welding is recommended. The surface of the welded areas must be dry and clean. Pressure must be applied to the full width of the seam on the top and bottom surface while the welded area is still in a melt-type condition. The bottom welding surface must be flat to insure that the entire seam is welded properly. Enough heat shall be applied in the welding process that a visible bead is extruded from both edges being welded. The bead insures that the material is in a melt condition and a successful chemical bond between the two surfaces is accomplished.

Two-inch overlapped seams must withstand a minimum of 240 pounds per inch width dead load at 70° F. and 120 pounds per inch width at 160° F. as outlined in ASTM D 751. All seams must exceed 550 lbs. bonded seam strength per ASTM D 751 Bonded Seam Strength Grab Test Method, Procedure A.

1.05 Inspection And Testing Of Factory Seams
The fabricator shall monitor each linear foot of seam as it is produced. Upon discovery of any defective seam, the fabricator shall stop production of panels used in this work and shall repair the seam, and determine and rectify the cause of the defect prior to continuation of the seaming process.

The fabricator must provide a Quality Control procedure to the owner or his representative which details his method of visual inspection and periodic system checks to ensure leak-proof factory fabrication.

1.06 Certification and Test Reports
Prior to installation of the panels, the fabricator shall provide the owner, or his representative, with written certification that the factory seams were inspected in accordance with Section 1.05.

1.07 Panel Packaging and Storage
Factory fabricated panels shall be accordian-folded, or rolled, onto a sturdy wooden pallet designed to be moved by a forklift or similar equipment. Each factory fabricated panel shall be prominently and indelibly marked with the panel size. Panels shall be protected as necessary to prevent damage to the panel during shipment.

Panels which have been delivered to the project site shall be stored in a dry area.

1.08 Qualifications of Suppliers
The fabricator of the lining shall be experienced in the installation of flexible membrane lining, and shall provide the owner or his representative with a list of not less than five (5) projects and not less than 500,000 square feet of successfully installed XR-5 synthetic lining. The project list shall show the name, address, and telephone number of an appropriate party to contact in each case. The manufacturer of the sheet goods shall provide similar documentation with a 10 million square foot minimum, with at least 5 projects demonstrating 10+ years service life.

The installer shall provide similar documentation to that required by the fabricator.

1.09 Subgrade Preparation By Others
Lining installation shall not begin until a proper base has been prepared to accept the membrane lining. Base material shall be free from angular rocks, roots, grass and vegetation. Foreign materials and protrusions shall be removed, and all cracks and voids shall be filled and the surface made level, or uniformly sloping as indicated

on the drawings. The prepared surface shall be free from loose earth, rocks, rubble and other foreign matter. Generally, no rock or other object larger than USCS sand (SP) should remain on the subgrade in order to provide an adequate safety factor against puncture. Geotextiles may be used to compensate for irregular subgrades. The subgrade shall be uniformly compacted to ensure against settlement. The surface on which the lining is to be placed shall be maintained in a firm, clean, dry and smooth condition during lining installation.

1.10 Lining Installation
Prior to placement of the liner, the installer will indicate in writing to the owner or his representative that he believes the subgrade to be adequately prepared for the liner placement.

The lining shall be placed over the prepared surface in such a manner as to assure minimum handling. The sheets shall be of such lengths and widths and shall be placed in such a manner as to minimize field seaming.

In areas where wind is prevalent, lining installation should be started at the upwind side of the project and proceed downwind. The leading edge of the liner shall be secured at all times with sandbags or other means sufficient to hold it down during high winds.

Sandbags or rubber tires may be used as required to hold down the lining in position during installation. Materials, equipment or other items shall not be dragged across the surface of the liner, or be allowed to slide down slopes on the lining. All parties walking or working upon the lining material shall wear soft-sole shoes.

Lining sheets shall be closely fit and sealed around inlets, outlets and other projections through the lining. Lining to concrete seals shall be made with a mechanical anchor, or as shown on the drawings. All piping, structures and other projections through the lining shall be sealed with approved sealing methods.

1.11 XR-5 Field Seaming
All requirements of Section 1.04 and 1.05 apply. A visible bead should be extruded from the hot air welding process.

Field fabrication of lining material will not be allowed.

1.12 Inspection
All field seams will be tested using the Air Lance Method. A compressed air source will deliver 55 psi minimum to a 3/16 inch nozzle. The nozzle will be directed to the lip of the field seam in a near perpendicular direction to the length of the field seam. The nozzle will be held 4 inches maximum from the seam and travel at a rate not to exceed 40 feet per minute. Any loose flaps of 1/8" or greater will require a repair.

Alternatively all field seams should also be inspected utilizing the Vacuum Box Technique as described in Standard Practice for Geomembrane Seam Evaluation by Vacuum Chamber (ASTM D 5641-94 (2006)), using a 3 to 5 psi vacuum pressure. All leaks shall be repaired and tested.

All joints, on completion of work, shall be tightly bonded. Any lining surface showing injury due to scuffing, penetration by foreign objects, or distress from rough subgrade, shall as directed by the owner or his representative be replaced or covered, and sealed with an additional layer of lining of the proper size, in accordance with the patching procedure.

1.13 Patching
Any repairs to the lining shall be patched with the lining material. The patch material shall have rounded corners and shall extend a minimum of four inches (4") in each direction from the damaged area.

Seam repairs or seams which are questionable should be cap stripped with a 1" wide (min.) strip of the liner material. The requirements of Section 1.11 apply to this cap stripping.

1.14 Warranty
The lining material shall be warranted on a pro-rated basis for 10 years against both weathering and chemical compatibility in accordance with Seaman Corporation warranty for XR-5® Style 8130. A test immersion will be performed by the owner and the samples evaluated by the manufacturer. Workmanship of installation shall be warranted for one year on a 100% basis.

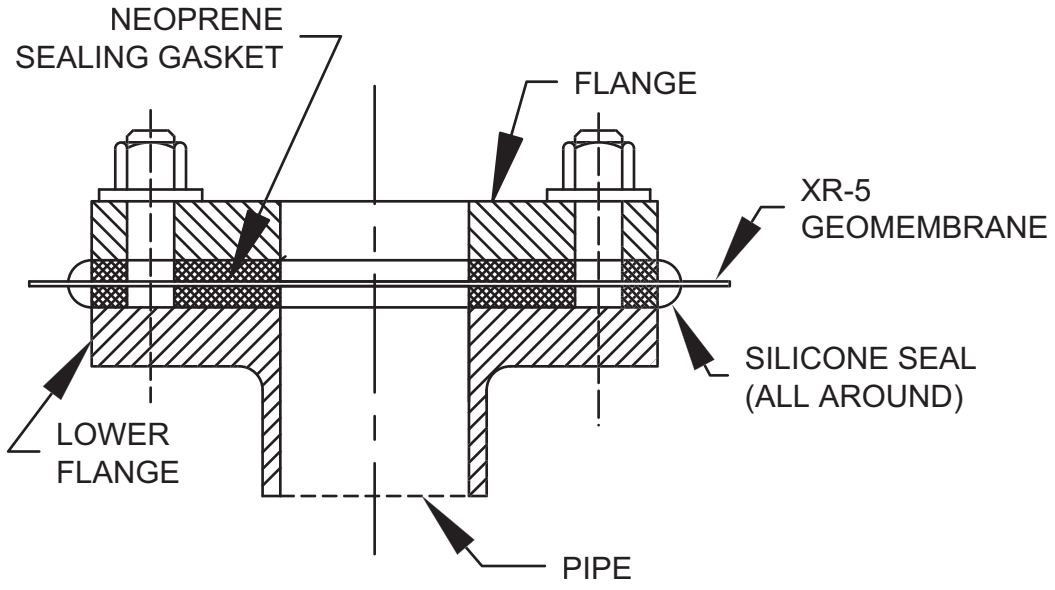

Seaman Corporation

ENGINEERED PRODUCTS GROUP

1000 Venture Blvd.,Wooster, Ohio 44691

FLANGE CONNECTION
TO
PIPE SECTION

SCALE: NONE

SHEET 1 of 1

DRAW NO. XRD-019

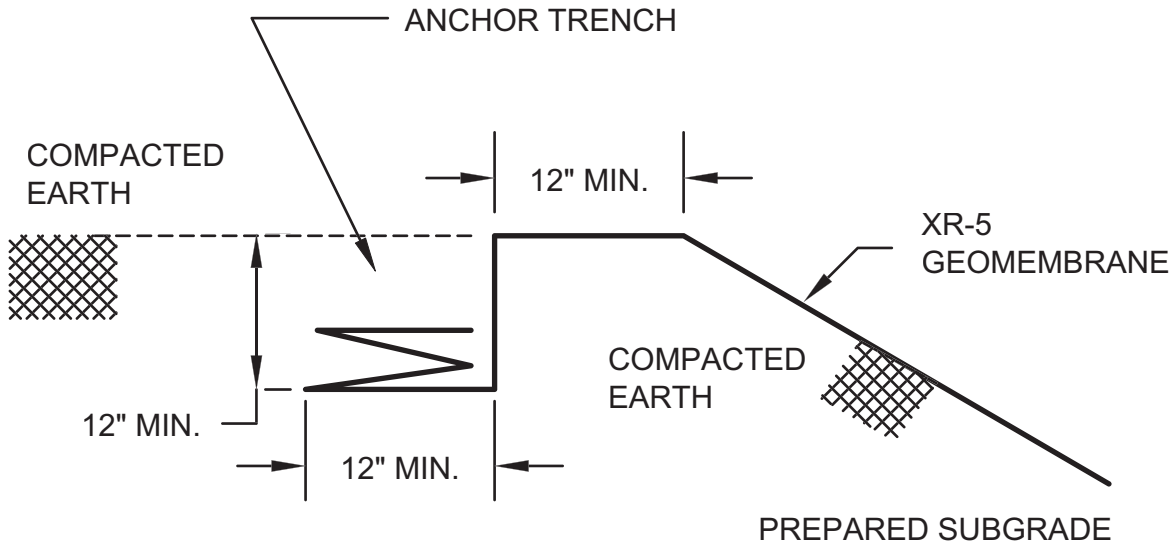

Seaman Corporation

ENGINEERED PRODUCTS GROUP

1000 Venture Blvd.,Wooster, Ohio 44691

ELEVATION VIEW
TYPICAL ANCHOR DETAILS
XR-5 LINER

SCALE: NONE

SHEET 1 of 1

DRAW NO. XRD-001

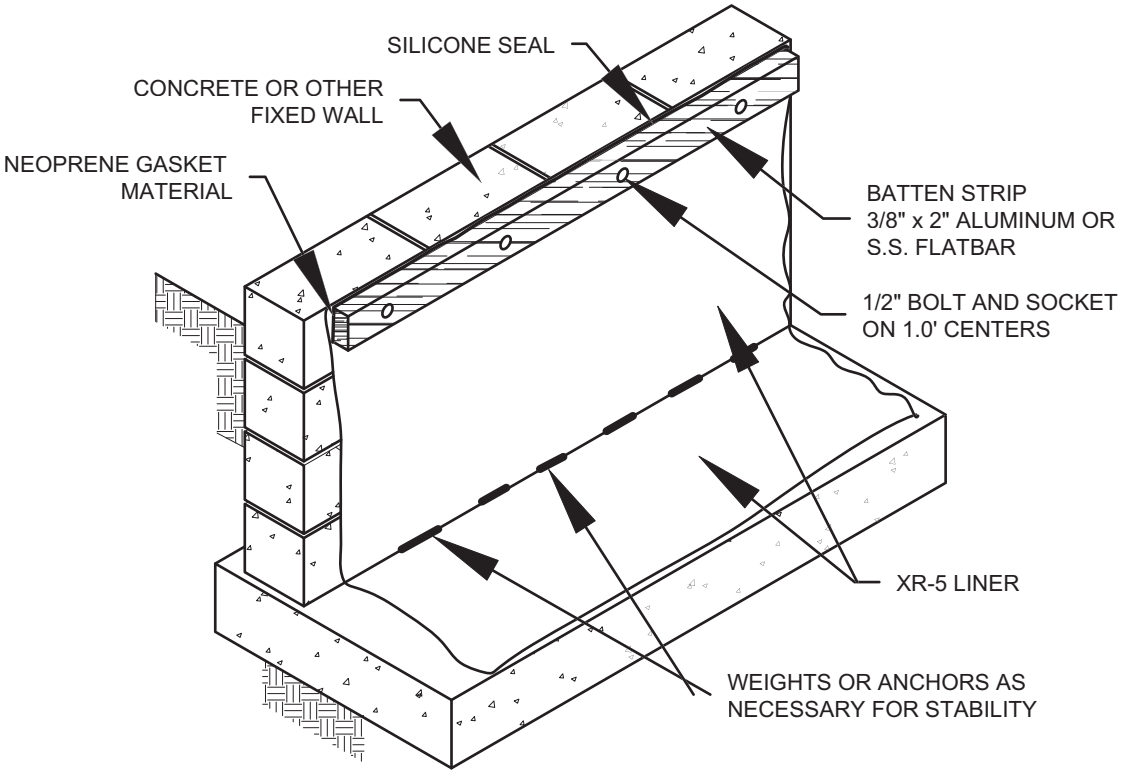

Seaman Corporation

ENGINEERED PRODUCTS GROUP

1000 Venture Blvd.,Wooster, Ohio 44691

ANCHORING DETAIL
XR-5 LINER TO FIXED WALL

SCALE: NONE	
SHEET 1 of 1	DRAW NO. XRD-023

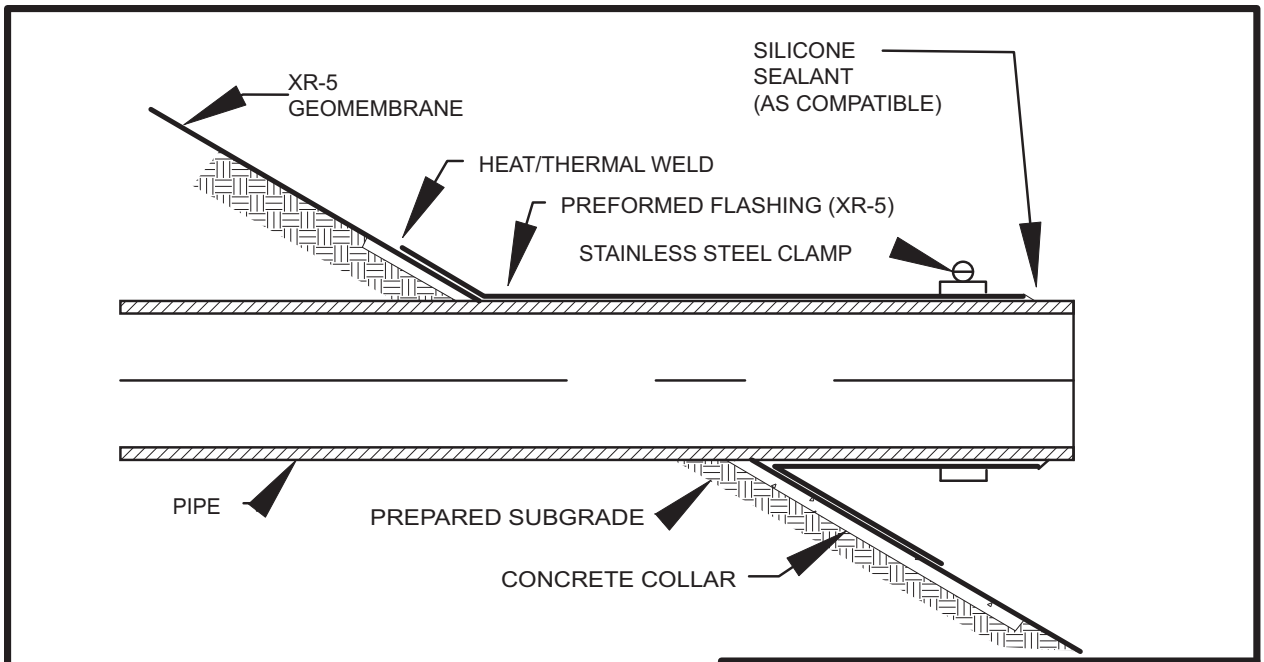

Seaman Corporation

ENGINEERED PRODUCTS GROUP

1000 Venture Blvd.,Wooster, Ohio 44691

ELEVATION VIEW
TYPICAL PIPE PUNCTURE
SEAL DETAIL XR-5 LINER

SCALE: NONE

SHEET 1 of 1

DRAW NO. XRD-018

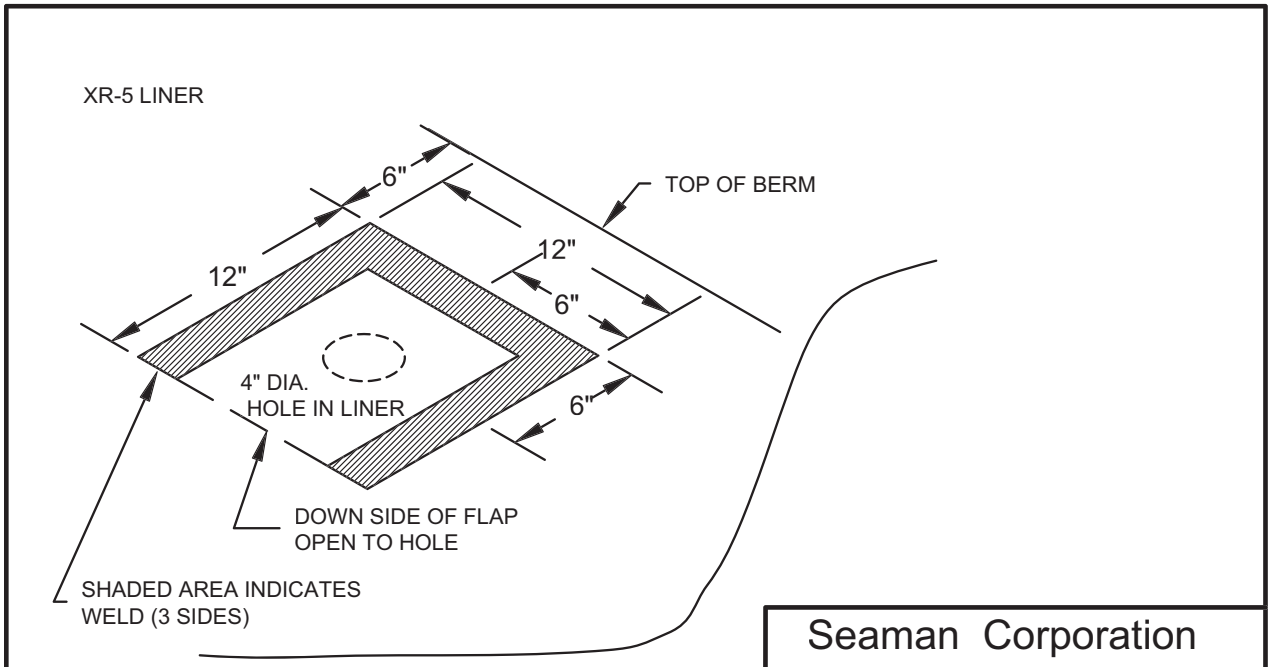

Seaman Corporation

ENGINEERED PRODUCTS GROUP

1000 Venture Blvd.,Wooster, Ohio 44691

PLAN VIEW
FLAP VENT DETAIL
XR-5 LINER

SCALE: NONE

SHEET 1 of 1

DRAW NO. XRD-012

Section 6 - Warranty Information

Warranty

XR-5® is offered with Seaman Corporation standard warranty which addresses weathering and chemical compatibility for a 10-year period. A test immersion is required with subsequent testing and approval by Seaman Corporation.

Instructions for XR-5 Test Immersions and Warranty Requests

1. Completely immerse six Style 8130 XR-5 samples (8-1/2" x 11" size) in the liquid to be contained.

2. At the end of approximately thirty days, retrieve three of the samples. The samples should be rinsed with fresh water and dried.

3. Send the three samples to:

   Attn: Geomembrane Department
   Seaman Corporation
   1000 Venture Blvd.
   Wooster, OH 44691

4. Keep the other three samples immersed until further notice in case longer immersion data is required.

5. Complete and return the information form on the liner application.

8228 XR-3® and all PW Geomembranes are offered with a standard 10-year warranty for weathering. The attached information form should be completed.

XR® Membrane Application and Utilization Form

Installation Owner and Address:

_____

_____

_____

_____

_____

_____

_____

Physical Location of Installation:

_____

_____

_____

_____

_____

_____

Expected Date of Installation: _____

Expected Beginning Date of Service: _____

Description of Application:
(Example: impoundment used to contain brine on an emergency basis.)

_____

_____

_____

_____

_____

Physical Features of Application:
(Example: 1.3 million gallon earthen impoundment with overall top dimensions of 160′ x 160′ with 3:1 slopes and 10′ deep.)

_____

_____

_____

_____

_____

Description of Liquid:

(Describe content of liquid including pollutants and expected temperature extremes in basin and at application point. Attach analysis of liquid chemistry, composition taken on a representative basis.)

Operational Characteristics:

(Describe the operation of the facility such as filling schedules, fluctuating liquid levels, operating temperatures, etc.)

Performance Requirements, Etc:

(State any other requirements, such as rate of permeability required.)

Owner represents the information herein is complete and accurate, and understands and agrees that issuance of Seaman Corporation Warranty for XR products are conditioned upon such completeness and accuracy.

OWNER'S SIGNATURE

Reference Materials:

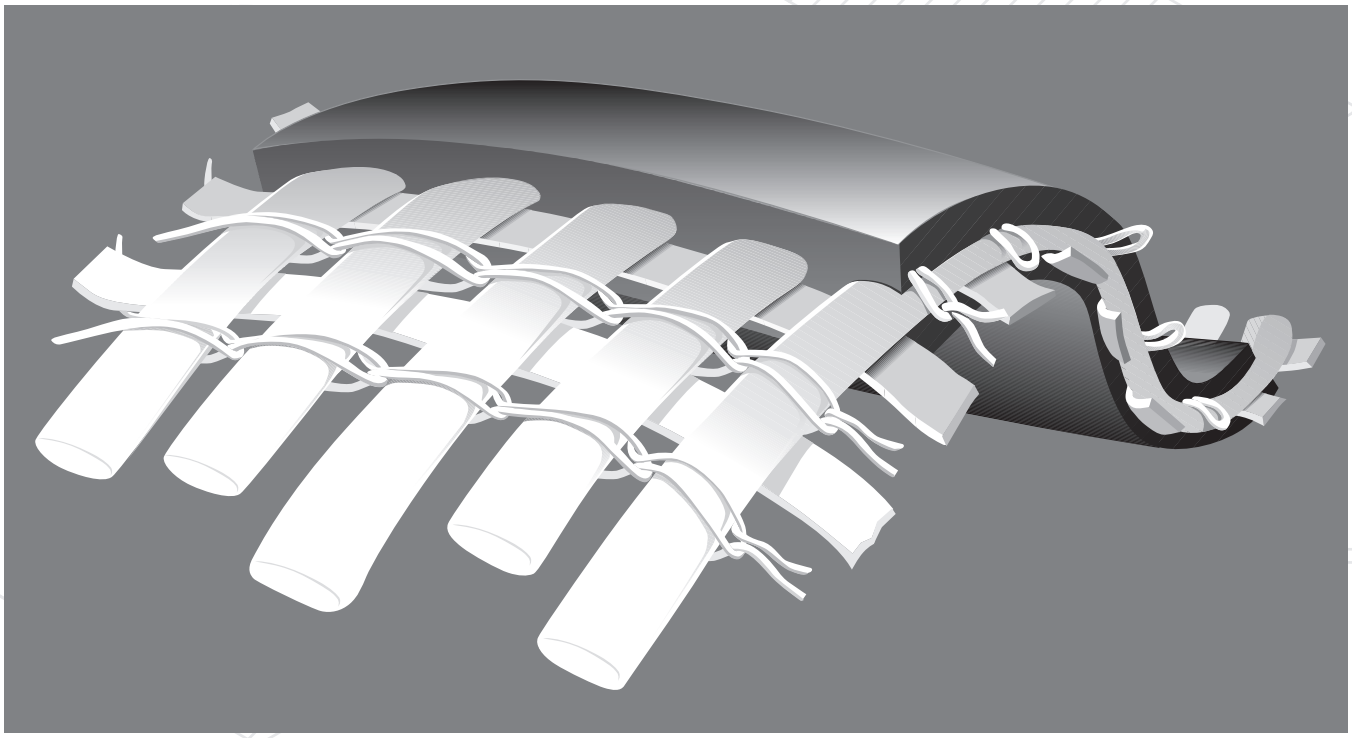

XR-5®: High Performance Composite Geomembrane

Seaman Corporation
1000 Venture Blvd.
Wooster, Ohio 44691
(330) 262-1111
www.xr-5.com

Marty Fritz

From: david.elbert zaymat.com <david.elbert@zaymat.com>
Sent: Tuesday, March 17, 2020 10:40 AM
To: Marty Fritz
Subject: Fw: BU20_Geofoam Shop Drawings
Attachments: XR geomembranes-tech-manual.pdf; 8130 & 8138 XR-5 specs.pdf

Security Alert - External Email

Hello Marty, here is the information below and attached. Thanks.

David M. Elbert
General Manager, VP
ZayMat Distributors
MBE/DBE/EDGE Certified
25906 Emery Road
Cleveland, OH 44128
216-402-0818 (cell)
www.zaymat.com

From: Brandon Twiford <brandon.twiford@cherokeemfg.com>
Sent: Tuesday, March 17, 2020 10:31 AM
To: david.elbert zaymat.com <david.elbert@zaymat.com>
Subject: Fwd: BU20_Geofoam Shop Drawings

Get Outlook for Android

From: Paul Schuh <paul@iwtcargoguard.com>
Sent: Monday, March 16, 2020 1:43:33 PM
To: Brandon Twiford <brandon.twiford@cherokeemfg.com>
Subject: FW: BU20_Geofoam Shop Drawings

Brandon – here is the explanation you require from Seaman's the manufacturer of this product.

Please see below and attached. Let me know if you need any additional information.

The geofoam spec below shows a "SHEAR" minimum requirement of 320 lbs. (ASTM D751). The term shear is referring to the weld strength pulled in the shear direction and can also be called "seam shear" or "bonded seam strength". That value is shown on page 2 of our tech manual as **550 lbs.** or the same value as grab tensile. This means that when the seam is pulled in shear, the weld is just as strong as the parent material (both at 550 lbs.). When welds are done correctly, XR-5 will always break in the parent material before breaking in the weld.

I've also attached a copy of ASTM D751 that goes over seam strength in sections 66-71.

Thanks –

Paul Schuh
IWT Cargo Guard
201-248-5193
paul@iwtcargoguard.com
www.iwtcargoguard.com

From: Marty Fritz <mwf@kokosing.biz>
Sent: Wednesday, March 11, 2020 3:10 PM
To: david.elbert zaymat.com <david.elbert@zaymat.com>
Subject: FW: BU20_Geofoam Shop Drawings

David,

Please see below comment from ODOT's review of the geomembrane submittal. According to plan notes, the membrane needs a shear strength of 320LB (note excerpt below). We can't find where this requirement is stated in the product data sheets. Can you have the supplier provide us this information so we can get this product approved and ordered? If possible, I would like to get this stuff ordered this week. So, a quick response would be much appreciated!

- THICKNESS: MINIMUM 30 MILS (ASTM D751)
- UNLEADED GASOLINE VAPOR MAXIMUM TRANSMISSION RATE 0.40 OZ. PER SQUARE FOOT PER 24 HOURS (ASTM D814)
- GRAB TENSILE STRENGTH: MINIMUM 550 LBS BOTH MACHINE AND CROSS DIRECTION (ASTM D751)
- ELONGATION AT BREAK: 20% MINIMUM (ASTM D751)
- TOUGHNESS: MINIMUM 11,000 POUNDS (GRAB TENSILE STRENGTH MULTIPLIED BY PERCENT ELONGATION)
- PUNCTURE RESISTANCE: MINIMUM 750 LB (ASTM D751 BALL TIP)
- COLD CRACK: PASS AT -30° FAHRENHEIT (ASTM D2136 1-INCH MANDREL, 4 HOURS)
- FACTORY SEAMS: 2-INCH MINIMUM BONDED WIDTH
- SHEAR: MINIMUM 320 LB (ASTM D751)

Give me a call with any questions.

Thanks,
Marty
330-819-9206

From: Mark.Gabele@dot.ohio.gov <Mark.Gabele@dot.ohio.gov>
Sent: Wednesday, March 11, 2020 1:43 PM
To: Marty Fritz <mwf@kokosing.biz>; Kevin.Kuntz@dot.ohio.gov
Cc: Mike Luyster <mrl@kokosing.biz>
Subject: RE: BU20_Geofoam Shop Drawings

Security Alert - External Email

Marty,

All the data for this product looks good except for the required shear strength. I couldn't find shear strength in the product data sheet.

Mark Gabele, P.E.
Project Engineer
ODOT District 12: Cuyahoga, Geauga & Lake counties
5500 Transportation Blvd., Garfield Heights, OH 44125
216-584-3591
transportation.ohio.gov

REINFORCED EARTH®
12001 Sunrise Valley Drive, Suite 400, Reston, VA 20191 (703) 547-8797
www.reinforcedearth.com

M.S.E. DESIGN SUBMITTAL FOR OHIO DEPARTMENT OF TRANSPORTATION

CUY-IR490/SR010-2.09/19.28
CITY OF CLEVELAND, CUYAHOGA COUNTY, OHIO

TABLE OF CONTENTS

Sheet Number	Sheet Title
01	COVER
02 △2	GENERAL NOTES
03 △2	PLAN VIEW 4AB SHEET 1
04	PLAN VIEW WALL 4AB SHEET 2
05	PLAN VIEW WALL 4CD
06 △1 △2 △3	WALL 4AB ELEVATION
07 △1 △2	WALL 4CD ELEVATION
08 △4 △2	ABUTMENT TYPICAL SECTION
09 △2	MSE WALL TYPICAL SECTION
10	TYPICAL DETAILS
11	ANGLE DETAILS
12	CORNER ELEMENT DETAILS
13 △4 △2	STANDARD PANEL DETAILS

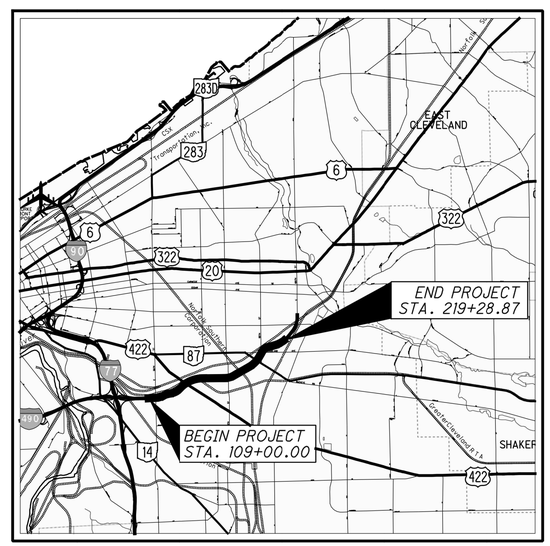

LOCATION MAP

LATITUDE: 41°29'08" LONGITUDE: 81°37'22"

SCALE IN MILES

0 1 2 3 4

N

INCLUDED MSE WALLS:
- WALL 4AB
- WALL 4CD

THE PRECASTER SHALL BE: NORWALK CONCRETE

CERTIFIED WITH RESPECT TO INTERNAL STABILITY OF REINFORCED EARTH STRUCTURES ONLY.

STATE OF OHIO
NICHOLAS A. DENI
E-75930
REGISTERED PROFESSIONAL ENGINEER
11/8/19

△1	9/24/19	REVISED PER E.L. ROBINSON COMMENT
△2	10/4/19	MISCELLANEOUS CLARIFICATION
△3	10/28/19	MISCELLANEOUS CLARIFICATION
△4	11/6/19	REVISED PER ODOT COMMENT

This drawing contains information proprietary to The Reinforced Earth Company, and is being furnished for the use of The Ohio Department of Transportation only in connection with this project, and the information contained is not to be transmitted to any other organization unless specifically authorized in writing by The Reinforced Earth Company. The Reinforced Earth Company is the exclusive licensee in the United States under patents held by our affiliated companies, and the furnishing of this drawing does not constitute an expressed or implied license under any applicable patents.

The design contained on these drawings is based on information provided by the Owner. On the basis of this information, The Reinforced Earth Company has designed, and is responsible for the internal stability of the structure only. External stability, including foundation (bearing capacity and settlement) and global stability (including sliding and rotation), is the responsibility of the Owner.

REINFORCED EARTH®
12001 Sunrise Valley Drive, Suite 400, Reston, VA 20191 (703) 547-8797
"REINFORCED EARTH℠" AND THE REINFORCED EARTH LOGO ARE REGISTERED TRADEMARKS OF THE REINFORCED EARTH COMPANY.

DATE: 9/6/19	REVIEWED: ND
PID No: 96833	DRAWN: CAA
REVISED:	DESIGNED: CAA
CHECKED: ND	

COVER
CUY-IR490/SR10-2.09/19.28
CUYAHOGA COUNTY

CUY-IR490/SR10-2.09/19.28

RE-18631

R:\RE18631_RLA_OH_CUY-IR 490\WALL PLANS\cover And Gen Notes.dwg

GENERAL NOTES:

DESIGN CRITERIA:

1. DESIGN IS BASED ON THE PARAMETERS BELOW, AND THE ASSUMPTION THAT THE FOUNDATION AND BACKFILL MATERIALS, METHODS OF CONSTRUCTION AND MATERIALS INSTALLED SHALL CONFORM TO THE APPLICABLE PROJECT TECHNICAL SPECIFICATIONS FOR M.S.E. WALLS.

2. CONTRACT DOCUMENT REFERENCE:
THE M.S.E. WALLS SHOWN IN THESE PLANS WERE DESIGNED AND DETAILED PER INFORMATION REFERENCED IN THE FOLLOWING CONTRACT DOCUMENTS:
   - CONTRACT PLANS: DATED 06/20/2020, SHT's 1 TO 12 OF 12
   - AASHTO SPECIFICATIONS: LRFD BRIDGE DESIGN SPECIFICATIONS, 7TH EDITION, (INCLUDING 2015 INTERIMS)
   - DOT SPECIFIED DOCUMENTS: ODOT BRIDGE DESIGN MANUAL, 2007.
   - SS840 DATED 4/15/2016

3. SOIL DESIGN PARAMETERS:(TO BE VERIFIED BY GEOTECHNICAL ENGINEER OF RECORD)

SELECT GRANULAR BACKFILL (REINFORCED SOIL ZONE):
Φ = 34 degrees (MINIMUM), c = 0 p.s.f., γ = 120 p.c.f.

RETAINED BACKFILL (COMPACTED EMBANKMENT FILL / IN SITU MATERIAL BEYOND SOIL REINFORCEMENT LIMITS):
Φ = 30 degrees, c = 0 p.s.f., γ = 120 p.c.f.

FOUNDATION MATERIAL:
Φ = 30 degrees, c = 0 p.s.f.

IF THE TESTED UNIT WEIGHT (γ) FOR THE SELECT MATERIAL VARIES (+ OR −) BY MORE THAN 10% FROM THE VALUE INDICATED ABOVE, THE CONTRACTOR SHALL CONTACT RECo AND THE GEOTECHNICAL ENGINEER OF RECORD TO ASSESS ANY POTENTIAL CHANGES TO THE MSE WALL DESIGN.

IF THE SHEAR STRENGTH (Φ), Cohesion (c) or COEFFICIENT OF SLIDING (μ) FOR THE FOUNDATION MATERIAL IS LESS THAN THE VALUES INDICATED ABOVE, THE CONTRACTOR SHALL CONTACT THE GEOTECHNICAL ENGINEER OF RECORD TO DETERMINE IF FOUNDATION IMPROVEMENT IS REQUIRED, AND CONTACT RECo TO ASSESS ANY POTENTIAL CHANGES TO THE MSE WALL DESIGN.

IF THE TESTED UNIT WEIGHT (γ) FOR THE RETAINED MATERIAL IS HEAVIER BY MORE THAN 10% FROM THE VALUE INDICATED ABOVE, THE CONTRACTOR SHALL CONTACT RECo AND THE GEOTECHNICAL ENGINEER TO ASSESS ANY POTENTIAL CHANGES TO THE MSE WALL DESIGN. IF THE SHEAR STRENGTH (Φ) FOR THE RETAINED MATERIAL IS LESS THAN THE VALUE INDICATED ABOVE, THE CONTRACTOR SHALL CONTACT RECo AND THE GEOTECHNICAL ENGINEER OF RECORD TO ASSESS ANY POTENTIAL CHANGES TO THE MSE WALL DESIGN.

4. DESIGN VEHICULAR SURCHARGE LOADING (IN ACCORDANCE WITH PROJECT SPECIFICATIONS)
HS−20/HL−93 TRUCK = 250 PSF EQUIVALENT DESIGN SURCHARGE

NOTE: THE DESIGN DOES NOT INCLUDE HEAVY TRUCK, EXCAVATOR OR CRANE LOADS (EQUIPMENT WITH A GROSS OPERATING WEIGHT GREATER THAN 72,000 LBS). COMPACTION EQUIPMENT SHALL BE SIZED BY THE CONTRACTOR WITH CONSIDERATION OF NECESSARY OFFSETS TO WALL FACING, BACKFILL TYPE AND LIFT THICKNESS (TYPICAL ROLLER STATIC WEIGHT: 8 TO 15 TON − DEPENDING ON APPLICATION). CONTRACTOR TO COORDINATE ANY HEAVY EQUIPMENT LOADING WITH RECo PRIOR TO FABRICATION OF WALL MATERIALS. ALL COSTS DUE TO LOADING IN EXCESS OF SPECIFICATIONS SHALL BE BORNE BY CONTRACTOR.

DESIGN LIFE: THE M.S.E. WALL HAS BEEN DESIGNED FOR A 100 YEAR SERVICE LIFE IN ACCORDANCE WITH PROJECT SPECIFICATIONS.

FOUNDATION PREPARATION:

5. THE CALCULATED MAXIMUM APPLIED BEARING PRESSURE AT THE FOUNDATION LEVEL IS SHOWN ON THE WALL ELEVATIONS FOR EACH DESIGN CASE. IT IS THE RESPONSIBILITY OF THE GEOTECH TO DETERMINE IF THE FOUNDATION SOILS HAVE ADEQUATE STRENGTH TO RESIST THE APPLIED DESIGNED BEARING PRESSURES.

M.S.E. WALL SUB−GRADE (ENTIRE FOOTPRINT = 2.0' IN FRONT OF WALL ALIGNMENT TO 2.0' BEYOND THE END OF THE DESIGNED LENGTH OF SOIL REINFORCEMENT AND ALONG THE ENTIRE LENGTH), SHOULD BE PROOF ROLLED WITH A HEAVY ROLLER, OR OTHERWISE EVALUATED IN ACCORDANCE WITH THE RECOMMENDATIONS OF THE GEOTECH. ANY UNSUITABLE FOUNDATION MATERIAL BELOW THE REINFORCED EARTH VOLUME, AS DETERMINED BY THE GEOTECH, SHALL BE EXCAVATED AND REPLACED WITH SUITABLE MATERIAL (PLACED IN CONTROLLED, COMPACTED LIFTS) OR OTHERWISE STABILIZED AS DIRECTED BY THE GEOTECH.

SOIL REINFORCEMENT NOTES:

6. SOIL REINFORCEMENT MAY BE ONE OR MORE OF THE FOLLOWING AS DESIGNED AND SUPPLIED BY RECo.
   - HIGH ADHERENCE "HA" STEEL STRIPS SHALL BE RIBBED, 50mm WIDE BY 4mm THICK AND COMPLY WITH THE FOLLOWING SPECIFIED REQUIREMENTS DEFINED WITHIN ASTM A6/A6M−07 "GENERAL REQUIREMENTS", AND ASTM A572/A572M, GRADE 65, TYPE 1, 2, OR 3.
   - HA STEEL STRIPS SHALL BE HOT−DIP GALVANIZED AFTER FABRICATION HAS BEEN COMPLETED. GALVANIZATION SHALL CONFORM TO THE MINIMUM REQUIREMENTS DEFINED WITHIN ASTM A123/A123M, SECTION 6.1, TABLE 2, COATING GRADE 85. (2 oz/sf).

WALL CONSTRUCTION:

7. FOR GENERAL INFORMATION PERTAINING TO WALL CONSTRUCTION PLEASE REFER TO THE "CONSTRUCTION AND QUALITY CONTROL PROCEDURE MANUAL" FOR RECTANGULAR PANELS AVAILABLE ONLINE AT www.reinforcedearth.com

2	10/4/19	MISCELLANEOUS CLARIFICATION

8. REINFORCED EARTH WALLS ALIGNED ALONG CURVES WILL FORM A SERIES OF SHORT CHORDS 9.84' EACH TO MATCH THE DESIRED WALL ALIGNMENT.

9. FOR LOCATION OF REINFORCED EARTH WALLS SEE CONTRACTS, REF. SHT. No(s). 5 AND 7 OF 10, AND RECo PLAN VIEW (DRAWING 3−5 OF THESE PLANS).

2 10. BACKFILL MATERIAL SHALL BE PLACED AND COMPACTED IN LIFTS (NO THICKER THAN 8" LOOSE LIFTS) AND IN ACCORDANCE WITH THE SPECIFICATIONS COVERING MSE WALLS, TO A LEVEL OF 2"(±) ABOVE THE LEVEL OF TIE STRIPS EMBEDDED AND PROTRUDING FROM THE REAR FACE OF THE PRECAST CONCRETE WALL FACING PANELS. INSTALLATION OF THE REINFORCING STRIPS SHALL BE PERMITTED ONLY AFTER PLACEMENT AND COMPACTION OF THE BACKFILL MATERIAL HAS REACHED THE REQUIRED LEVEL. WHERE THE PROJECT OR DEPARTMENT COMPACTION REQUIREMENTS ARE STRICTER (I.E. 98% DENSITY REQUIREMENT, 8" LOOSE LIFTS) THE STRICTER REQUIREMENT WILL BE USED.

11. M.S.E. SELECT BACKFILL SHALL BE COMPACTED IN ACCORDANCE WITH THE PROJECT SPECIFICATIONS, AS A MINIMUM: M.S.E. SELECT FILL SHALL BE COMPACTED TO 95% STANDARD PROCTOR (ASTM D−698 OR AASHTO T−99, WITH OVERSIZE CORRECTION) AT A MOISTURE CONTENT 1% TO 2% BELOW OPTIMUM MOISTURE CONTENT. IF 30% OR MORE OF THE SELECT GRANULAR BACKFILL IS GREATER THAN ¾" IN SIZE, ASTM D−698/AASHTO T−99 IS NOT APPLICABLE. FOR SUCH A MATERIAL, THE ACCEPTANCE CRITERION FOR CONTROL OF COMPACTION SHALL BE EITHER A MINIMUM OF 70% OF THE RELATIVE DENSITY OF THE MATERIAL AS DETERMINED BY ASTM D−4253 AND D−4254, OR A METHOD SPECIFICATION, BASED ON A TEST COMPACTION SECTION WHICH DEFINES THE TYPE OF EQUIPMENT, LIFT THICKNESS NUMBER OF PASSES OF THE SPECIFIED EQUIPMENT, AND PLACEMENT MOISTURE CONTENT. WHERE THE DEPARTMENT'S COMPACTION REQUIREMENTS ARE MORE STRICT, THAT DEPARTMENT'S REQUIREMENTS SHALL BE USED IN GENERAL.

12. HEAVY COMPACTION AND OPERATION EQUIPMENT SHALL BE KEPT A MINIMUM DISTANCE OF 3'−0" FROM THE BACK FACE OF THE PRECAST CONCRETE WALL FACING PANELS. COMPACTION WITHIN THE 3'−0" ZONE SHALL BE ACHIEVED WITH AT LEAST SIX (6) PASSES OF A LIGHTWEIGHT MECHANICAL TAMPER, ROLLER OR VIBRATORY SYSTEM (LESS THAN 1,000 LBS.), SMALLER LIFTS MAY BE REQUIRED TO ACHIEVE ADEQUATE COMPACTION (GENERALLY REGARDED AS 90% STANDARD PROCTOR FOR THIS ZONE). COMPACTION DENSITY TESTS ARE NOT REQUIRED WITHIN SAID 3 FT. ZONE, EXCEPT WHERE REQUIRED BY PROJECT SPECIAL PROVISIONS AND IF STRUCTURAL FOOTINGS ARE TO BE PLACED ATOP THE MSE WALL WITHIN THE 3 FT ZONE.

13. THE FINISHED GRADE BACKFILL IN FRONT OF THE WALL SHALL BE PLACED AND COMPACTED AS SOON AS POSSIBLE (AS CONSTRUCTION SEQUENCE PERMITS TO ALLOW FOR BOTTOM PANELS TO MOVE TOWARDS A PLUMB POSITION) TO MITIGATE THE POTENTIAL FOR EROSION AND UNDERMINING OF THE CONCRETE LEVELING PAD. IN ANY EVENT, BACKFILL IN FRONT OF THE WALL SHALL BE PLACED AND COMPACTED BEFORE WALL CONSTRUCTION EXCEEDS A HEIGHT OF 20 FT. FINISHED GRADE BACKFILL SHALL BE PLACED IN LIFTS AND PROPERLY COMPACTED AS REQUIRED BY PROJECT SPECIFICATIONS.

14. FOR MANHOLES, DRAIN PIPES, DROP INLETS AND/OR OTHER UTILITIES LOCATED WITHIN THE MSE VOLUME, WHERE REINFORCING STRIPS ARE BLOCKED FROM BEING PLACED NORMALLY, REINFORCING STRIPS MAY BE SKEWED UP TO THE MAXIMUM OF 15° TO AVOID THE OBSTRUCTION. IF SPECIFIC DETAILS HAVE NOT BEEN INCLUDED ADDRESSING AN OBSTRUCTION, AND THE ANGLE OF THE NECESSARY SKEW TO CLEAR THE OBSTRUCTION IS GREATER THAN 15°, THE CONTRACTOR SHALL CONTACT RECo FOR APPROPRIATE DETAIL TO ACCOMMODATE THE OBSTRUCTION.

15. IF PILES ARE TO BE LOCATED WITHIN THE MSE VOLUME, THEY SHALL BE ALIGNED AND DRIVEN PRIOR TO THE CONSTRUCTION OF THE MSE STRUCTURE. UNLESS A METHOD TO PROTECT THE MSE STRUCTURE AND ALL NECESSARY ELEMENTS HAS BEEN DEVISED BY THE CONTRACTOR AND FOUND ACCEPTABLE TO THE GEOTECH AND/OR ON−SITE ENGINEER, AND RECo.

16. STRUCTURAL FOUNDATIONS, DRAINAGE ELEMENTS, SLABS, AND/OR LOADINGS PROPOSED ATOP THE MSE COMPACTED MASS SHALL BE CONSTRUCTED ONLY AFTER THE GEOTECH HAS DETERMINED THAT SUFFICIENT SETTLEMENT OF THE M.S.E. STRUCTURE AND EMBANKMENT HAS TAKEN PLACE TO ADEQUATELY SUPPORT THE SUPERIMPOSED ELEMENTS AND/OR LOADINGS.

17. IT IS THE CONTRACTOR'S RESPONSIBILITY TO DETERMINE THE LOCATION OF ANY GUARDRAIL, FENCE AND/OR LIGHT POSTS (ETC.) BEHIND THE RECo WALL PANELS. PRIOR TO THE PLACEMENT OF THE TOP LAYER(S) OF SOIL REINFORCEMENT STRIPS, INDIVIDUAL STRIPS MAY BE SKEWED TO AVOID THE PROPOSED VERTICAL OBSTRUCTIONS IF AUTHORIZED BY RECo. ANY DAMAGE DONE TO THE SOIL REINFORCEMENT STRIPS DUE TO THE INSTALLATION OF THE VERTICAL OBSTRUCTIONS SHALL BE REPAIRED OR REPLACED BY THE CONTRACTOR, AND AT THE CONTRACTOR'S EXPENSE.

18. IF EXISTING AND/OR PROPOSED STRUCTURES, PIPES, FOUNDATIONS OR SAFETY GUARDRAIL POST WHICH ARE LOCATED WITHIN THE RECo VOLUME MASS, AND MAY INTERFERE WITH THE NORMAL PLACEMENT OF THE SOIL REINFORCING STRIPS AND SPECIFIC DIRECTION HAS NOT BEEN PROVIDED ON THE PLANS, THE CONTRACTOR SHALL NOTIFY RECo TO OBTAIN NECESSARY DETAILS FOR REINFORCING STRIP PLACEMENT.

19. ALL DESIGN, DETAILING, FABRICATION AND CHECKING OF REQUIRED REINFORCING STEEL FOR ANY C.I.P. CONCRETE WORK IS THE RESPONSIBILITY OF THE CONTRACTOR, UNLESS OTHERWISE STATED AND DETAILED WITHIN THESE PLANS PREPARED BY THE REINFORCED EARTH COMPANY.

20. PRECAST TOP OUT PANELS BENEATH CAST−IN−PLACE COPING, PRECAST COPING AND PRECAST TRAFFIC BARRIER (LEVEL UP CONCRETE) MAY HAVE #4 DOWELS PROTRUDING FROM THE PANELS AS DETAILED IN PANEL CASTING SHOP DRAWINGS. DOWELS SHALL BE FIELD CUT BY CONTRACTOR WHERE PANELS ARE EMBEDDED INTO A CAST IN PLACE MOMENT SLAB OR OTHER FOOTING/SLAB ELEMENT. EXPANSION JOINT MATERIAL, AND/OR BOND BREAKER SHALL BE PLACED BETWEEN EACH SIDE OF FACING PANEL IN CONTACT WITH CAST IN PLACE CONCRETE ELEMENTS (EXCEPT AS SHOWN IN THE PLANS).

21. THE CONTRACTOR IS RESPONSIBLE FOR GRADUALLY DEFLECTING THE UPPER LEVEL OF SOIL REINFORCEMENT STRIPS DOWNWARD TO AVOID CONFLICTS WITH PAVING AND ROADWAY SUBGRADE PREPARATION. THE CONTRACTOR'S ATTENTION IS DIRECTED ESPECIALLY TO SITUATIONS WHERE ROADWAY SUPER−ELEVATION AND/OR SOIL MIXING ARE ANTICIPATED. SPECIAL ATTENTION SHOULD BE DIRECTED TO PROPER PLACEMENT OF IMPERVIOUS MEMBRANES, GEOTEXTILES, FOUNDATION AREAS AND UNDERGROUND UTILITIES. A MINIMUM OF 3" SELECT BACKFILL COVER IS REQUIRED BETWEEN SOIL REINFORCING STRIPS AND ANY ELEMENT OTHER THAN SELECT FILL MATERIAL.

22. THE CONTRACTOR IS RESPONSIBLE FOR CONTROLLING STORM WATER DRAINAGE IN THE VICINITY OF THE WALL DURING CONSTRUCTION. STORM WATER RUNOFF IS TO BE COLLECTED AND DISCHARGED AWAY FROM THE WALL AND THE REINFORCED BACKFILL MASS. M.S.E. WALL BACKFILL SHALL NOT BE PLACED OR TRAVELED UPON WHEN SATURATED. COMPACTED BACKFILL SHALL BE RE−WORKED OR ALLOWED TO DRY WHEN THE MOISTURE CONTENT EXCEEDS OPTIMUM.

23. FINISHED GRADE TREATMENT DESIGN ALONG TOP AND TOE OF M.S.E. WALLS, INCLUDING EROSION CONTROL, IS THE RESPONSIBILITY OF THE CIVIL ENGINEER OF RECORD.

MATERIALS NOTES:

24. SELECT BACKFILL GRADATION REQUIREMENTS:

SIEVE SIZE	MIN. PERCENT PASSING
4"	100
No. 40	0 − 60
No. 200	0 − 15

PLASTICITY INDEX (PI), AS DETERMINED BY AASHTO T−90, SHALL NOT EXCEED 6.

25. SELECT BACKFILL ELECTROCHEMICAL REQUIREMENTS:

PROPERTY	REQUIREMENT	TEST METHOD
RESISTIVITY	MINIMUM 3,000 ohm−cm AT 100% SATURATION	AASHTO T−288 / ASTM G−57
pH	4.5 TO 9	AASHTO T−289 / ASTM G−51
CHLORIDES*	MAXIMUM 100 ppm	AASHTO T−291 / ASTM D−512
SULFATES*	MAXIMUM 200 ppm	AASHTO T−29 / ASTM D−516

* IF THE MINIMUM RESISTIVITY EXCEEDS 5,000 ohm−cm AT 100% SATURATION, THE NEED FOR TESTING OF CHLORIDES AND SULFATES IS WAIVED.

SPECIAL REFERENCE KEY:
- THE REINFORCED EARTH COMPANY (HEREINAFTER REFERRED TO AS "RECo")
- GEOTECHNICAL ENGINEER OF RECORD (HEREINAFTER REFERRED TO AS "GEOTECH")
- MECHANICALLY STABILIZED EARTH (HEREINAFTER REFERRED TO AS "MSE")
- CAST−IN−PLACE (HEREINAFTER REFERRED TO AS "C.I.P.")
- INTERNAL STABILITY: FAILURE MODES NOT ENGAGING OUTSIDE THE VOLUME LIMITED BY THE TOP OF LEVELING PAD ELEVATION, THE TOP OF PANEL ELEVATION, THE FACING ELEMENTS AND THE END OF THE SOIL REINFORCEMENT.
- INTERNAL STABILITY INCLUDES:
  - SOIL REINFORCEMENT TENSILE CAPACITY
  - SOIL REINFORCEMENT PULL−OUT CAPACITY
  - FACING ELEMENTS STRUCTURAL CAPACITY
  - STRUCTURAL CAPACITY OF CONNECTIONS BETWEEN SOIL REINFORCEMENTS AND FACING ELEMENTS.

26. SELECT BACKFILL DURABILITY REQUIREMENTS:
THE MATERIAL SHALL BE SUBSTANTIALLY FREE OF SHALE OR OTHER SOFT, POOR DURABILITY PARTICLES. THE MATERIAL SHALL HAVE A MAGNESIUM SULFATE SOUNDNESS LOSS OF LESS THAN 30 PERCENT AFTER FOUR (4) CYCLES, AS DETERMINED BY AASHTO T−104 (OR ASTM C−88).

27. NOMINAL STRIP LENGTHS:
THE REINFORCING STRIPS LENGTHS SHOWN ON THESE PLANS, ARE MEASURED FROM THE REAR FACE OF THE M.S.E. WALL FASCIA PANEL, AND ARE NOMINAL LENGTHS REQUIRED BY THE DESIGN CALCULATIONS. THE REQUIRED HORIZONTAL LIMIT OF GRANULAR BACKFILL IS EQUAL TO THE NOMINAL STRIP LENGTH. ADDITIONAL GRANULAR BACKFILL BEYOND THE NOMINAL STRIP IS NOT REQUIRED BY DESIGN, HOWEVER MAY BE REQUIRED BY SPECIAL PROVISIONS AS DIRECTED BY THE OWNER'S DESIGN.

28. PANEL FINISH:
   - THE PRECAST CONCRETE FACING PANEL SHALL HAVE A PLAIN FINISH. UNLESS NOTED OTHERWISE. CORNER ELEMENTS, SLIP JOINT UNITS AND PRECAST COPING UNITS SHALL HAVE A PLAIN SMOOTH FINISH.
   - ALL FACING ELEMENTS WILL BE PROVIDED WITH NATURAL CONCRETE GRAY CEMENT. ANY PREPARATION FOR, AND APPLICATION OF PENETRATING STAIN, SEALANTS OR OTHER COATINGS SHALL BE PROVIDED BY OTHERS.

29. NOTE TO CONTRACTORS:
ONLY THE FOLLOWING MATERIALS ARE SUPPLIED BY THE REINFORCED EARTH COMPANY:
   - PRECAST CONCRETE FACING PANELS, CORNER ELEMENTS AND SLIP JOINT COVERS.
   - SOIL REINFORCEMENTS: HIGH ADHERENCE (HA) STRIPS
   - BOLT SETS FOR ATTACHING REINFORCING STRIPS TO PANELS (BOLT, NUT & WASHER)
   - BEARING PADS, (CONTROL HORIZONTAL JOINT SPACING)
   - RUBBER SHIMS (CONTROL PANEL ALIGNMENT)
   - JOINT GEOTEXTILE AND ADHESIVE
   - PRECAST CONCRETE TOP OUT COPING UNITS
   - GALVANIZED STEEL ANGLES FOR USE AT OBSTRUCTION LOCATIONS.

ANY OTHER MATERIALS CALLED FOR IN THE CONTRACT PLANS OR SPECIFICATIONS ARE TO BE SUPPLIED BY THE CONTRACTOR. ANY JOINT MATERIALS SHOWN AT THE INTERFACE OF PRECAST PANELS AND CAST−IN−PLACE CONCRETE STRUCTURES ARE TO BE SUPPLIED BY THE ERECTION CONTRACTOR. ALL SANDBLASTING, PAINTING, SEALERS OR OTHER SPECIAL APPLIED COATINGS ARE ALSO SUPPLIED/INSTALLED BY THE CONTRACTOR IN THE FIELD FOLLOWING PANEL ERECTION.

30. HANDLING, LOADING AND LIFTING PROCEDURES REFERENCED IN THESE PLANS OR THE CONSTRUCTION AND QUALITY CONTROL PROCEDURE MANUAL WHEN FURNISHED BY THE REINFORCED EARTH COMPANY ("RECo"), ARE GENERAL IN NATURE AND DO NOT INCLUDE ANY ANALYSIS OR ASSESSMENT OF SITE SPECIFIC CONDITIONS, THE NATURE OF ANY EQUIPMENT USED BY OTHERS, OR MEANS AND METHODS UTILIZED BY ANY CONTRACTOR, FABRICATOR, OR DELIVERY COMPANY. ALL FIRMS OR ENTITIES USING THESE PLANS OR INVOLVED IN THE HANDLING, TRANSPORT, LOADING, UNLOADING OR ERECTION OF PRODUCTS SUPPLIED BY RECo. SHALL MAKE AN INDEPENDENT REVIEW AND ASSESSMENT OF ALL HANDLING, LOADING AND LIFTING CONDITIONS AND PROCEDURES AND SHALL NOT SOLELY RELY ON ANY GENERAL RECOMMENDATIONS SUPPLIED BY RECo. THE CONTRACTOR SHALL DEVISE AND EXECUTE PROJECT SPECIFIC PROCEDURES FOR HANDLING, LOADING AND LIFTING WHICH COMPLY WITH ALL FEDERAL, STATE AND LOCAL SAFETY LAWS, REGULATIONS AND REQUIREMENTS AND ALL APPLICABLE CONTRACT REQUIREMENTS AT ALL LOCATIONS WHERE RECo MATERIALS ARE LOADED, UNLOADED, HANDLED OR ERECTED.

CERTIFIED WITH RESPECT TO INTERNAL STABILITY OF REINFORCED EARTH STRUCTURES ONLY.

STATE OF OHIO
NICHOLAS A. DENI
E-75930
REGISTERED PROFESSIONAL ENGINEER
11/8/19

This drawing contains information proprietary to The Reinforced Earth Company, and is being furnished for the use of The Ohio Department of Transportation only in connection with this project, and the information contained is not to be transmitted to any other organization unless specifically authorized in writing by The Reinforced Earth Company. The Reinforced Earth Company is the exclusive licensee in the United States under patents held by our affiliated companies, and the furnishing of this drawing does not constitute an expressed or implied license under any applicable patents.

The design contained on these drawings is based on information provided by the Owner. On the basis of this information, The Reinforced Earth Company has designed, and is responsible for the internal stability of the structure only. External stability, including foundation (bearing capacity and settlement) and global stability (including sliding and rotation), is the responsibility of the Owner.

REINFORCED EARTH®
12001 Sunrise Valley Drive, Suite 400, Reston, VA 20191 (703) 547-8797
"REINFORCED EARTH℠" AND THE REINFORCED EARTH LOGO ARE REGISTERED TRADEMARKS OF THE REINFORCED EARTH COMPANY.

DATE: 9/6/19	
REVIEWED: ND	PID No: 96833
DRAWN: CAA	REVISED:
DESIGNED: CAA	CHECKED: ND

GENERAL NOTES
CUY−IR490/SR10−2.09/19.28
CUYAHOGA COUNTY

CUY−IR490/SR10−2.09/19.28

RE−18631

R:\RE18631_RLA_OH_CUY−IR 490\WALL PLANS\cover And Gen Notes.dwg

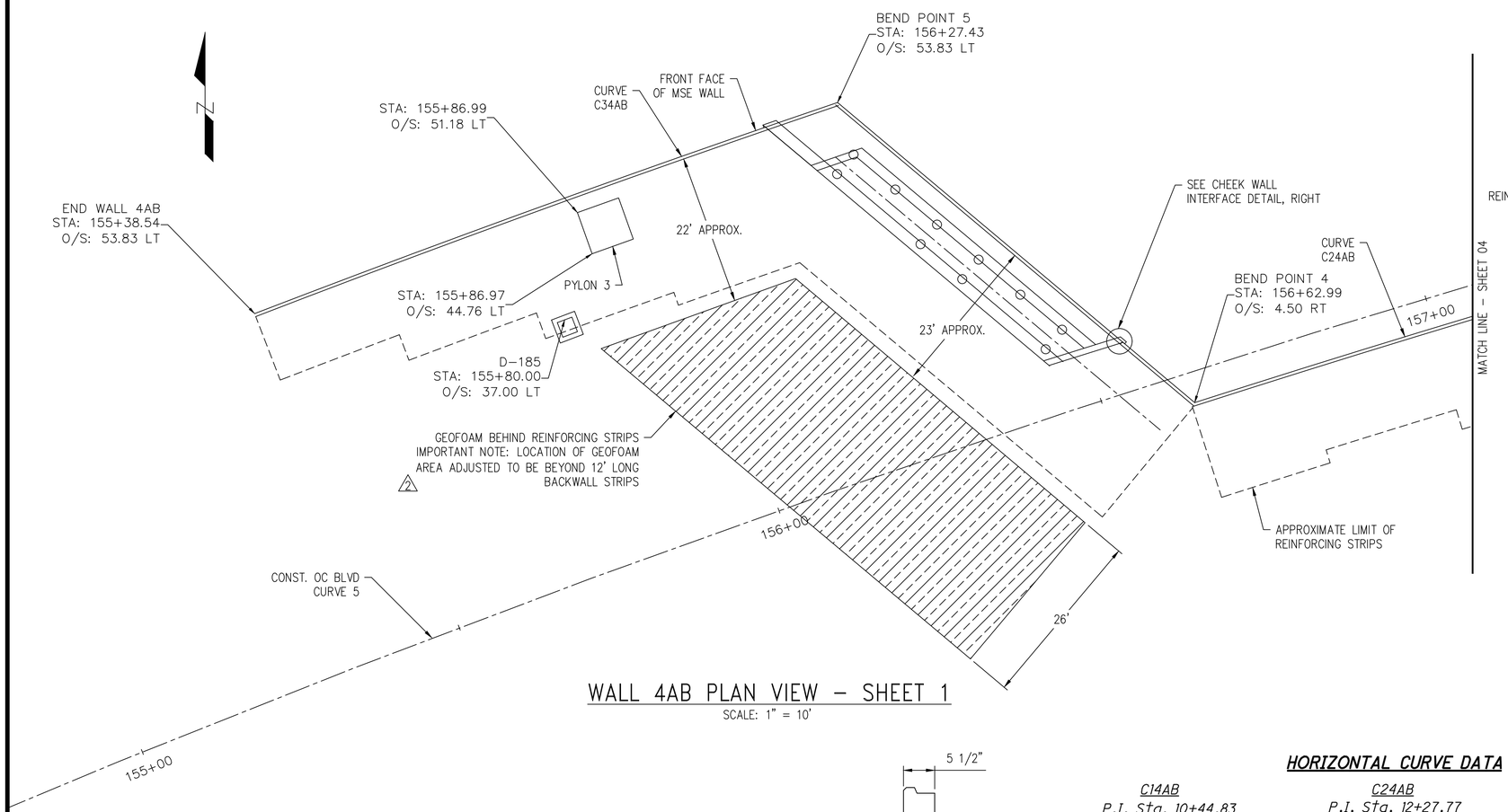

WALL 4AB PLAN VIEW - SHEET 1

SCALE: 1" = 10'

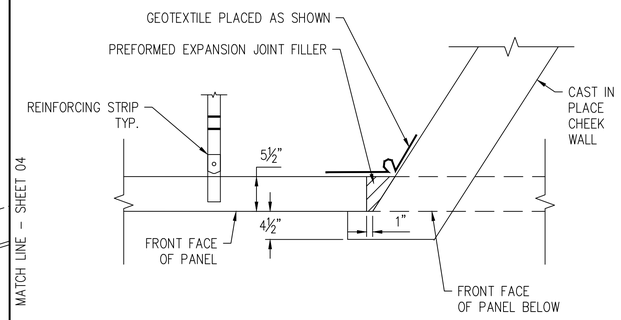

MSE WALL/CHEEK WALL INTERFACE DETAIL

SCALE: 1" = 1'-0"

OTHER LOCATIONS SIMILAR

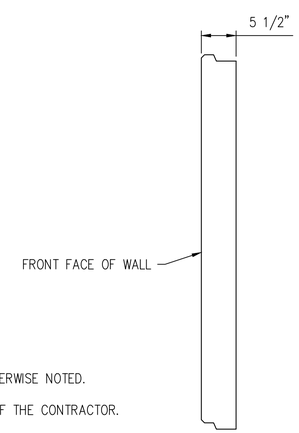

PANEL SECTION

SCALE: 1" = 1'-0"

HORIZONTAL CURVE DATA

C14AB
P.I. Sta. 10+44.83
Δ = 2° 25′ 05″ (RT)
Dc = 2° 41′ 50″
R = 2,124.17′
T = 44.83′
L = 89.65′
E = 0.47′
C = 89.64′
C.B. = N 74° 44′ 53″ E

C24AB
P.I. Sta. 12+27.77
Δ = 2° 40′ 53″ (LT)
Dc = 2° 36′ 35″
R = 2,195.50′
T = 51.38′
L = 102.74′
E = 0.60′
C = 102.73′
C.B. = S 73° 30′ 34″ W

C34AB
P.I. Sta. 14+12.42
Δ = 3° 17′ 29″ (LT)
Dc = 2° 32′ 32″
R = 2,253.83′
T = 64.75′
L = 129.47′
E = 0.93′
C = 129.46′
C.B. = S 69° 35′ 49″ W

CURVE 5
P.I. STA. 154+96.35
Δ = 46°36′56″
Dc = 2°36′18″
R = 2200.00′
T = 947.83′
L = 1789.91′
E = 195.49′

WALL BASELINE GEOMETRY			
	℄ WALL 4AB STA.	℄ CONST. O.C. BLVD STA.	OFFSET
BEGIN WALL	10+41.69	157+58.72	75.83′ RT
BEND POINT 1	10+89.65	158+08.45	75.83′ RT
BEND POINT 2	10+97.77	158+12.26	68.59′ RT
BEND POINT 3	11+76.39	157+65.94	4.50′ RT
BEND POINT 4	12+79.14	156+62.99	4.50′ RT
BEND POINT 5	13+47.67	156+27.43	53.83′ LT
END WALL	14+38.73	155+38.54	53.83′ LT

NOTES:
1. DIMENSIONS IN FEET UNLESS OTHERWISE NOTED.
2. STATIONS AND OFFSETS RELATING TO M.S.E. WALL ARE GIVEN TO STRUCTURAL FRONT FACE OF WALL UNLESS OTHERWISE NOTED.
3. STATIONS AND OFFSETS ARE IN REFERENCE TO BASELINE CONST. OC BLVD.
4. LIMITS OF REINFORCING STRIPS ARE BASED ON STRIP LENGTHS. LIMITS OF EXCAVATION ARE THE RESPONSIBILITY OF THE CONTRACTOR.

2	10/4/19	MISCELLANEOUS CLARIFICATION

This drawing contains information proprietary to The Reinforced Earth Company, and is being furnished for the use of The Ohio Department of Transportation only in connection with this project, and the information contained is not to be transmitted to any other organization unless specifically authorized in writing by The Reinforced Earth Company. The Reinforced Earth Company is the exclusive licensee in the United States under patents held by our affiliated companies, and the furnishing of this drawing does not constitute an expressed or implied license under any applicable patents.

The design contained on these drawings is based on information provided by the Owner. On the basis of this information, The Reinforced Earth Company has designed, and is responsible for the internal stability of the structure only. External stability, including foundation (bearing capacity and settlement) and global stability (including sliding and rotation), is the responsibility of the Owner.

CERTIFIED WITH RESPECT TO INTERNAL STABILITY OF REINFORCED EARTH STRUCTURES ONLY.

STATE OF OHIO
NICHOLAS A. DENI
E-75930
REGISTERED PROFESSIONAL ENGINEER
11/8/19

REINFORCED EARTH®
12001 Sunrise Valley Drive, Suite 400, Reston, VA 20191 (703) 547-8797
"REINFORCED EARTH℠" AND THE REINFORCED EARTH LOGO ARE REGISTERED TRADEMARKS OF THE REINFORCED EARTH COMPANY.

DESIGNED: CAA	DRAWN: CAA
CHECKED: ND	REVISED:
REVIEWED: ND	DATE: 9/6/19
PID No: 96833	

PLAN VIEW 4AB SHEET 1
CUY-IR490/SR10-2.09/19.28
CUYAHOGA COUNTY

CUY-IR490/SR10-2.09/19.28

RE-18631

R:\RE18631_RLA_OH_CUY-IR 490\WALL PLANS\Plan View.dwg

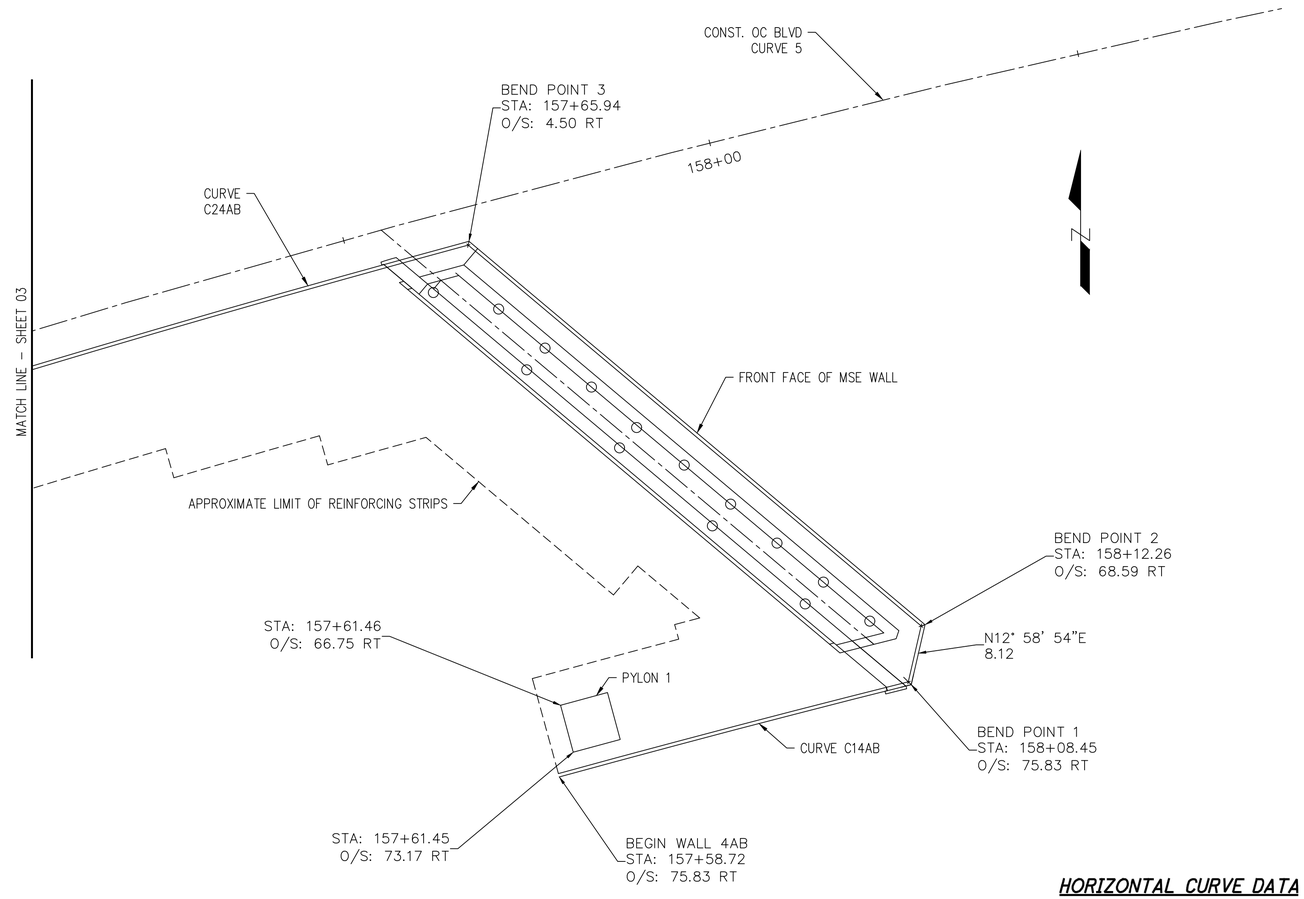

WALL 4AB PLAN VIEW - SHEET 2

SCALE: 1" = 10'

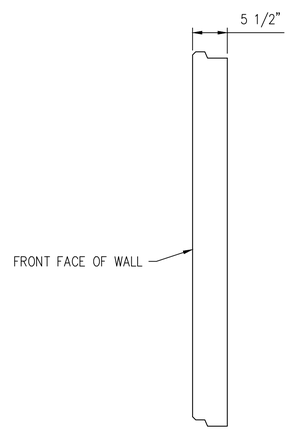

PANEL SECTION

SCALE: 1" = 1'-0"

HORIZONTAL CURVE DATA

C14AB
P.I. Sta. 10+44.83
Δ = 2° 25′ 05″ (RT)
Dc = 2° 41′ 50″
R = 2,124.17′
T = 44.83′
L = 89.65′
E = 0.47′
C = 89.64′
C.B. = N 74° 44′ 53″ E

C24AB
P.I. Sta. 12+27.77
Δ = 2° 40′ 53″ (LT)
Dc = 2° 36′ 35″
R = 2,195.50′
T = 51.38′
L = 102.74′
E = 0.60′
C = 102.73′
C.B. = S 73° 30′ 34″ W

C34AB
P.I. Sta. 14+12.42
Δ = 3° 17′ 29″ (LT)
Dc = 2° 32′ 32″
R = 2,253.83′
T = 64.75′
L = 129.47′
E = 0.93′
C = 129.46′
C.B. = S 69° 35′ 49″ W

CURVE 5
P.I. STA. 154+96.35
Δ = 46°36′56″
Dc = 2°36′18″
R = 2200.00′
T = 947.83′
L = 1789.91′
E = 195.49′

WALL BASELINE GEOMETRY

	℄ WALL 4AB STA.	℄ CONST. O.C. BLVD STA.	OFFSET
BEGIN WALL	10+41.69	157+58.72	75.83′ RT
BEND POINT 1	10+89.65	158+08.45	75.83′ RT
BEND POINT 2	10+97.77	158+12.26	68.59′ RT
BEND POINT 3	11+76.39	157+65.94	4.50′ RT
BEND POINT 4	12+79.14	156+62.99	4.50′ RT
BEND POINT 5	13+47.67	156+27.43	53.83′ LT
END WALL	14+38.73	155+38.54	53.83′ LT

NOTES:
1. DIMENSIONS IN FEET UNLESS OTHERWISE NOTED.
2. STATIONS AND OFFSETS RELATING TO M.S.E. WALL ARE GIVEN TO STRUCTURAL FRONT FACE OF WALL UNLESS OTHERWISE NOTED.
3. STATIONS AND OFFSETS ARE IN REFERENCE TO BASELINE CONST. OC BLVD.
4. LIMITS OF REINFORCING STRIPS ARE BASED ON STRIP LENGTHS. LIMITS OF EXCAVATION ARE THE RESPONSIBILITY OF THE CONTRACTOR.

CERTIFIED WITH RESPECT TO INTERNAL STABILITY OF REINFORCED EARTH STRUCTURES ONLY.

STATE OF OHIO
NICHOLAS A. DENI
E-75930
REGISTERED PROFESSIONAL ENGINEER
11/8/19

This drawing contains information proprietary to The Reinforced Earth Company, and is being furnished for the use of The Ohio Department of Transportation only in connection with this project, and the information contained is not to be transmitted to any other organization unless specifically authorized in writing by The Reinforced Earth Company. The Reinforced Earth Company is the exclusive licensee in the United States under patents held by our affiliated companies, and the furnishing of this drawing does not constitute an expressed or implied license under any applicable patents.

The design contained on these drawings is based on information provided by the Owner. On the basis of this information, The Reinforced Earth Company has designed, and is responsible for the internal stability of the structure only. External stability, including foundation (bearing capacity and settlement) and global stability (including sliding and rotation), is the responsibility of the Owner.

REINFORCED EARTH®
12001 Sunrise Valley Drive, Suite 400, Reston, VA 20191 (703) 547-8797
"REINFORCED EARTH℠" AND THE REINFORCED EARTH LOGO ARE REGISTERED TRADEMARKS OF THE REINFORCED EARTH COMPANY.

DESIGNED: CAA	DRAWN: CAA	REVIEWED: ND	DATE: 9/6/19
CHECKED: ND	REVISED:		PID No: 96833

PLAN VIEW WALL 4AB SHEET 2
CUY-IR490/SR10-2.09/19.28
CUYAHOGA COUNTY

CUY-IR490/SR10-2.09/19.28

RE-18631

R:\RE18631_RLA_OH_CUY-IR 490\WALL PLANS\Plan View.dwg

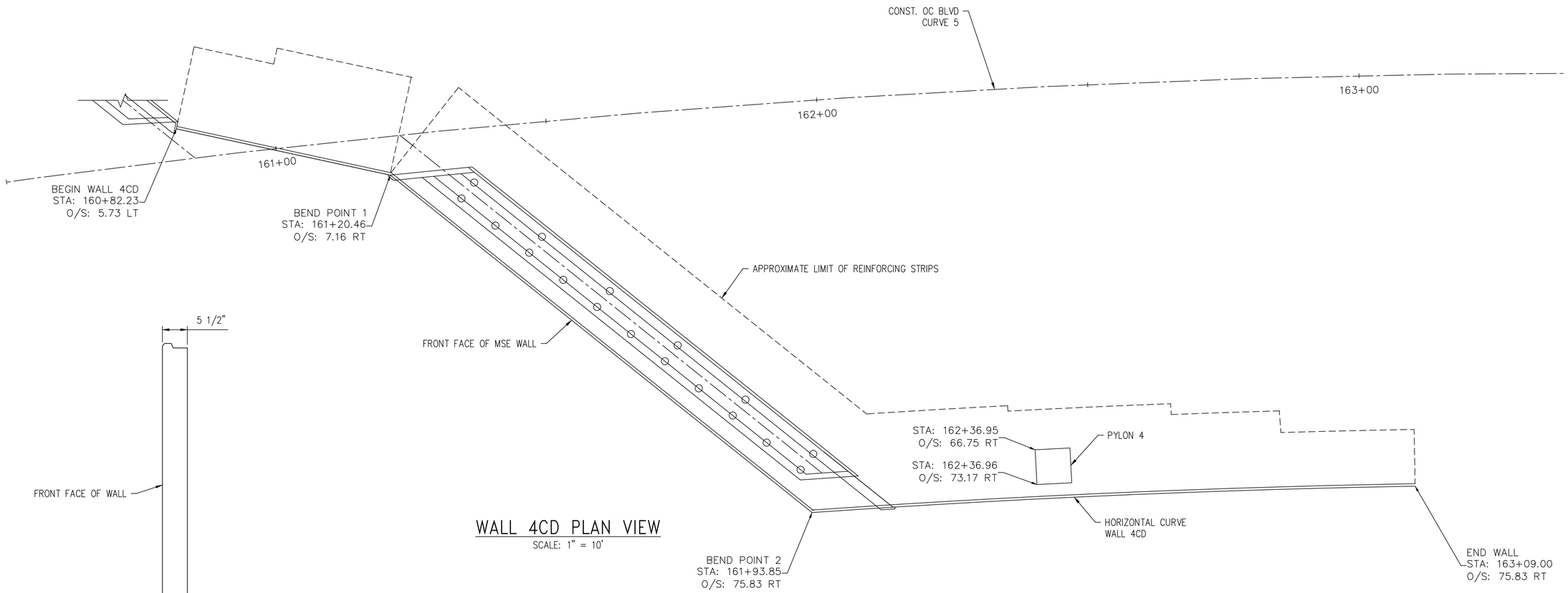

WALL 4CD PLAN VIEW

SCALE: 1" = 10'

PANEL SECTION

SCALE: 1" = 1'-0"

CONST. O.C. BLVD
CURVE 5
P.I. STA. 154+96.35
Δ = 46°36'56"
Dc = 2°36'18"
R = 2200.00'
T = 947.83'
L = 1789.91'
E = 195.49'

WALL 4CD
HORIZONTAL CURVE DATA
P.I. Sta. 12+10.92
Δ = 4° 48' 32" (RT)
Dc = 2° 41' 50"
R = 2,124.17'
T = 89.19'
L = 178.28'
E = 1.87'
C = 178.23'
C.B. = N 88° 23' 55" E

WALL BASELINE GEOMETRY			
	℄ WALL 4CD STA.	℄ CONST. O.C. BLVD STA.	OFFSET
BEGIN WALL	9+81.90	160+82.23	5.73' LT
BEND POINT 1	10+22.23	161+20.46	7.16' RT
BEND POINT 2	11+21.72	161+93.85	75.83' RT
END WALL	12+32.90	163+09.00	75.83' RT

NOTES:
1. DIMENSIONS IN FEET UNLESS OTHERWISE NOTED.
2. STATIONS AND OFFSETS RELATING TO M.S.E. WALL ARE GIVEN TO STRUCTURAL FRONT FACE OF WALL UNLESS OTHERWISE NOTED.
3. STATIONS AND OFFSETS ARE IN REFERENCE TO BASELINE CONST. OC BLVD.
4. LIMITS OF REINFORCING STRIPS ARE BASED ON STRIP LENGTHS. LIMITS OF EXCAVATION ARE THE RESPONSIBILITY OF THE CONTRACTOR.

CERTIFIED WITH RESPECT TO INTERNAL STABILITY OF REINFORCED EARTH STRUCTURES ONLY.

STATE OF OHIO
NICHOLAS A. DENI
E-75930
REGISTERED PROFESSIONAL ENGINEER
11/8/19

This drawing contains information proprietary to The Reinforced Earth Company, and is being furnished for the use of The Ohio Department of Transportation only in connection with this project, and the information contained is not to be transmitted to any other organization unless specifically authorized in writing by The Reinforced Earth Company. The Reinforced Earth Company is the exclusive licensee in the United States under patents held by our affiliated companies, and the furnishing of this drawing does not constitute an expressed or implied license under any applicable patents.

The design contained on these drawings is based on information provided by the Owner. On the basis of this information, The Reinforced Earth Company has designed, and is responsible for the internal stability of the structure only. External stability, including foundation (bearing capacity and settlement) and global stability (including sliding and rotation), is the responsibility of the Owner.

REINFORCED EARTH®
12001 Sunrise Valley Drive, Suite 400, Reston, VA 20191 (703) 547-8797
"REINFORCED EARTH®" AND THE REINFORCED EARTH LOGO ARE REGISTERED TRADEMARKS OF THE REINFORCED EARTH COMPANY.

DESIGNED: CAA	DRAWN: CAA	REVIEWED: ND	DATE: 9/6/19
CHECKED: ND	REVISED:		PID No: 96833

PLAN VIEW WALL 4CD
CUY-IR490/SR10-2.09/19.28
CUYAHOGA COUNTY

CUY-IR490/SR10-2.09/19.28

RE-18631

R:\RE18631_RLA_OH_CUY-IR 490\WALL PLANS\Plan View.dwg

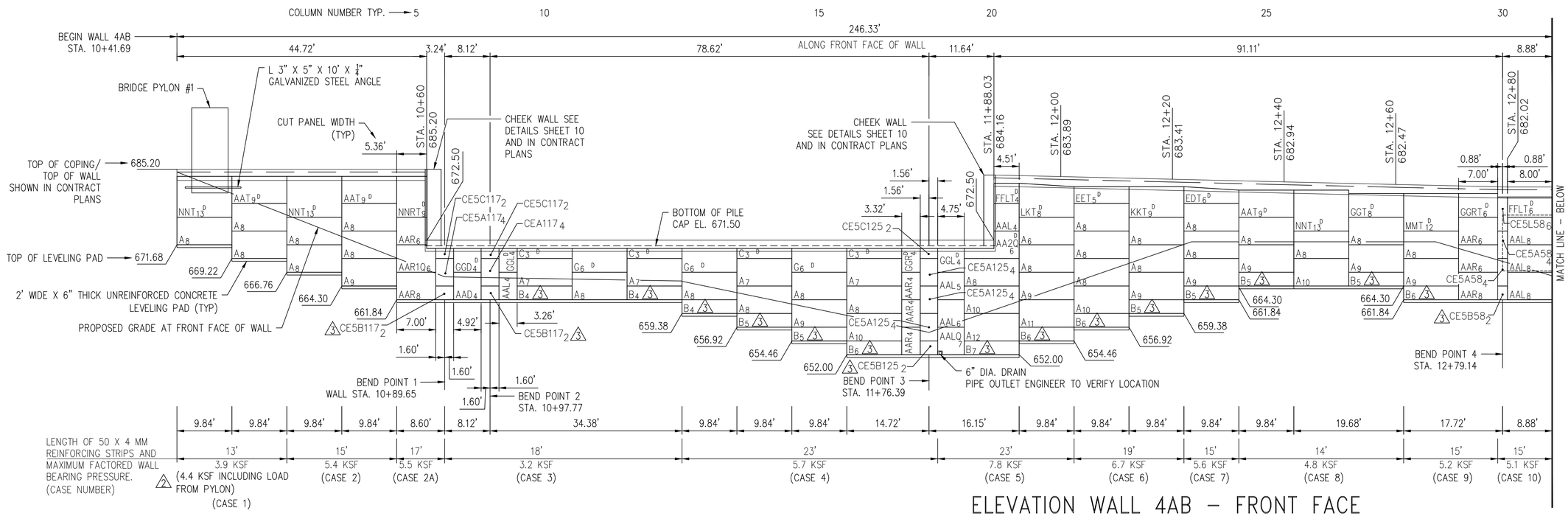

ELEVATION WALL 4AB – FRONT FACE

SCALE : 1" = 10'

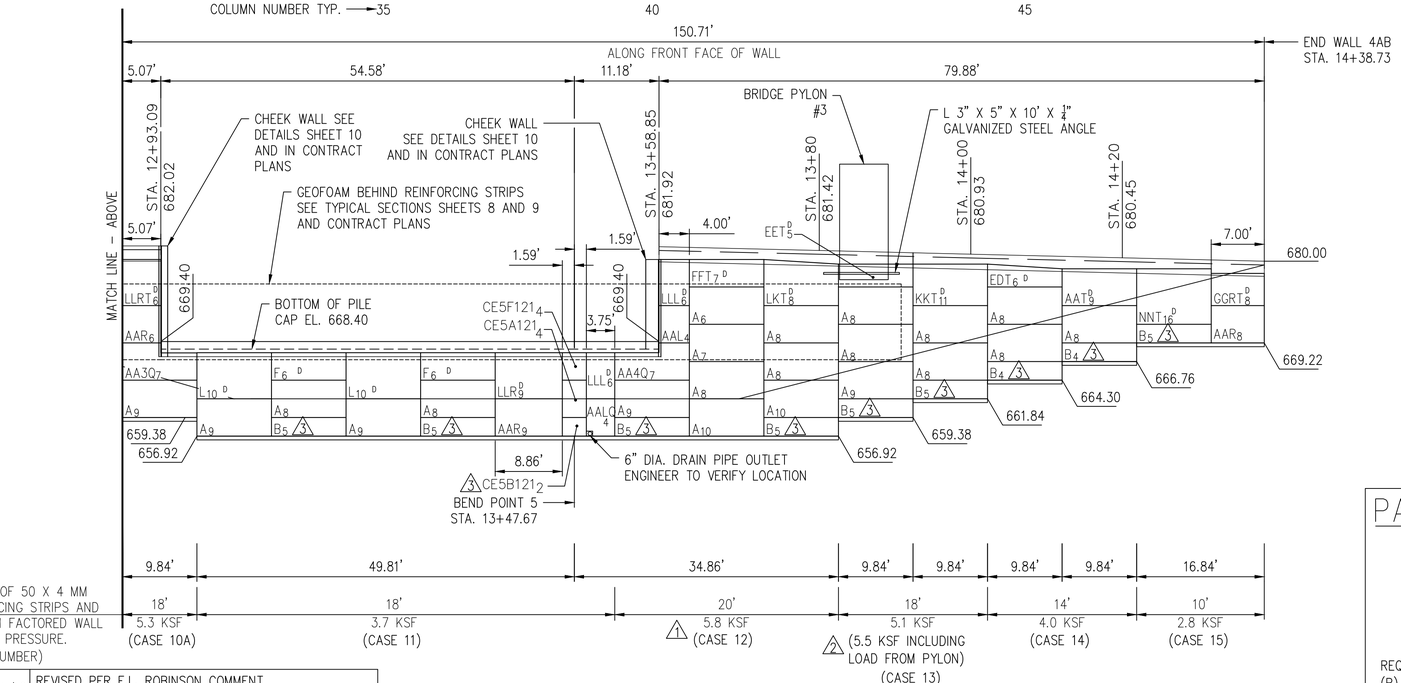

NOTE:
FOR "M" AND "N" HEIGHT PANELS AT THE TOP OF A WALL, THE PANELS SHALL BE PLACED, CLAMPED AND BACKFILLED TO AT LEAST 10" ABOVE BOTTOM ROW OF TIE STRIPS EMBEDDED IN THE "M" OR "N" PANEL WITHIN THE SAME DAY. NO "M" OR "N" HEIGHT PANEL SHALL BE PLACED AND CLAMPED AND THEN LEFT OVERNIGHT WITHOUT ALSO PLACING AT LEAST 10" OF BACKFILL OVER THE BOTTOM ROW OF REINFORCING STRIPS. AS AN ALTERNATIVE TO THIS BACKFILL REQUIREMENT, THE "M" OR "N" PANEL MAY BE EXTERNALLY BRACED IN ADDITION TO BEING CLAMPED TO ADJACENT PANELS.

NOTES:
1. ALL DIMENSIONS IN FEET UNLESS OTHERWISE NOTED.
2. LENGTH OF LEVELING PADS ARE BASED ON INDIVIDUAL PANEL WIDTHS, FROM ℄ OF PANEL JOINT TO ℄ OF PANEL JOINT.
3. TOP OF WALL ELEVATIONS ARE SHOWN TO TOP OF COPING.
4. STATIONS ARE GIVEN TO STRUCTURAL FRONT FACE OF M.S.E. WALL PANEL.
5. STATIONS REFERENCE WALL BASELINE UNLESS OTHERWISE NOTED.
6. FINISHED GRADE SHOWN AT FACE OF WALL IS APPROXIMATE AND SHALL BE VERIFIED BY CONTRACTOR.
7. 6" DIAMETER DRAIN PIPE OUTLET SHIFTED TO ACCOMMODATE CORNER ELEMENT LOCATION.
8. SEE SHEET 12 FOR CORNER ELEMENT PLAN VIEW LAYOUTS.

PANEL KEY:

$AART_6^{D}$

- D — PANEL ADDITIONS (D) = DOWELS IN PANEL
- 6 — REQUIRED NUMBER OF TIE STRIPS
- AART — PANEL FORM SHAPE
- A — REQUIRED PANEL CUT EDGE (R) = RIGHT SIDE CUT (L) = LEFT SIDE CUT
- T — T = SHIFTED TIE STRIPS

CERTIFIED WITH RESPECT TO INTERNAL STABILITY OF REINFORCED EARTH STRUCTURES ONLY.

STATE OF OHIO
NICHOLAS A. DENI
E-75930
REGISTERED PROFESSIONAL ENGINEER
11/8/19

1	9/24/19	REVISED PER E.L. ROBINSON COMMENT
2	10/4/19	MISCELLANEOUS CLARIFICATION
3	10/28/19	MISCELLANEOUS CLARIFICATION

This drawing contains information proprietary to The Reinforced Earth Company, and is being furnished for the use of The Ohio Department of Transportation only in connection with this project, and the information contained is not to be transmitted to any other organization unless specifically authorized in writing by The Reinforced Earth Company. The Reinforced Earth Company is the exclusive licensee in the United States under patents held by our affiliated companies, and the furnishing of this drawing does not constitute an expressed or implied license under any applicable patents.

The design contained on these drawings is based on information provided by the Owner. On the basis of this information, The Reinforced Earth Company has designed, and is responsible for the internal stability of the structure only. External stability, including foundation (bearing capacity and settlement) and global stability (including sliding and rotation), is the responsibility of the Owner.

REINFORCED EARTH®
12001 Sunrise Valley Drive, Suite 400, Reston, VA 20191 (703) 547-8797
REINFORCED EARTH® AND THE REINFORCED EARTH LOGO ARE REGISTERED TRADEMARKS OF THE REINFORCED EARTH COMPANY.

DATE: 9/6/19
REVIEWED: ND
PID No: 96833
DRAWN: CAA
REVISED:
DESIGNED: CAA
CHECKED: ND

WALL 4AB ELEVATION
CUY-IR490/SR10-2.09/19.28
CUYAHOGA COUNTY

CUY-IR490/SR10-2.09/19.28

RE-18631

R:\RE18631_RLA_OH_CUY-IR 490\WALL PLANS\Wall 4AB Elevation.dwg

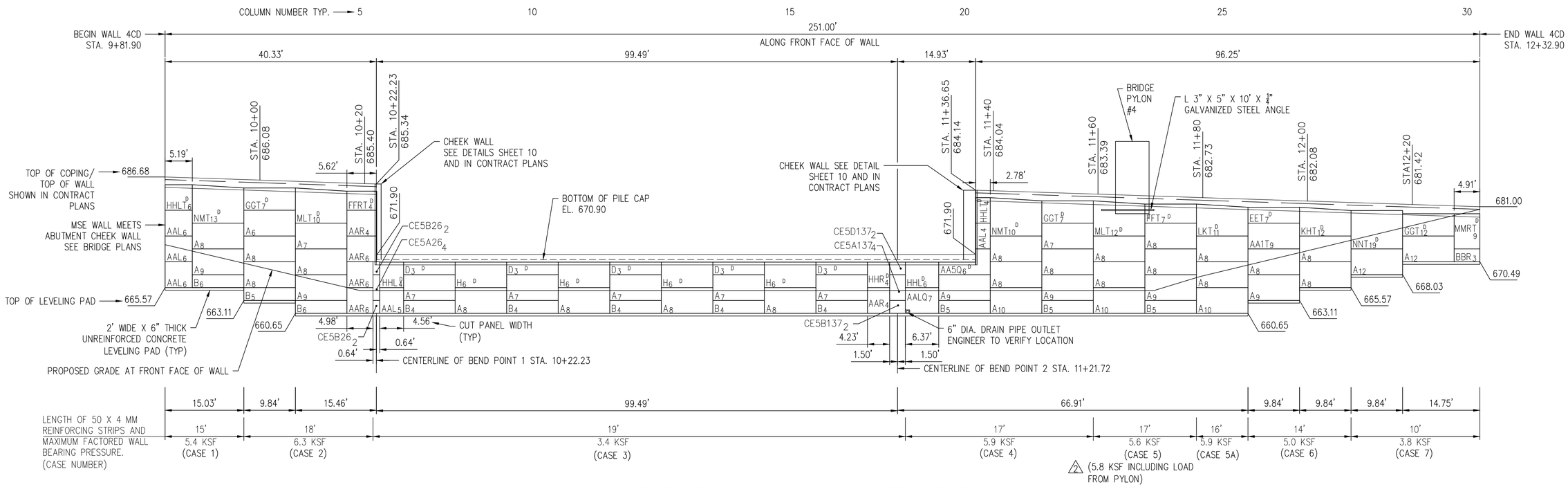

ELEVATION WALL 4CD – FRONT FACE

SCALE : 1" = 10'

NOTES:

1. ALL DIMENSIONS IN FEET UNLESS OTHERWISE NOTED.
2. LENGTH OF LEVELING PADS ARE BASED ON INDIVIDUAL PANEL WIDTHS, FROM ℄ OF PANEL JOINT TO ℄ OF PANEL JOINT.
3. TOP OF WALL ELEVATIONS ARE SHOWN TO TOP OF COPING.
4. STATIONS ARE GIVEN TO STRUCTURAL FRONT FACE OF M.S.E. WALL PANEL.
5. STATIONS REFERENCE WALL BASELINE UNLESS OTHERWISE NOTED.
6. FINISHED GRADE SHOWN AT FACE OF WALL IS APPROXIMATE AND SHALL BE VERIFIED BY CONTRACTOR.
7. 6" DIAMETER DRAIN PIPE OUTLET SHIFTED TO ACCOMMODATE CORNER ELEMENT LOCATION.
8. SEE SHEET 12 FOR CORNER ELEMENT PLAN VIEW LAYOUTS.

PANEL KEY:

$AART_6^{D}$

- D — PANEL ADDITIONS (D) = DOWELS IN PANEL
- 6 — REQUIRED NUMBER OF TIE STRIPS
- AART — PANEL FORM SHAPE
- A — REQUIRED PANEL CUT EDGE (R) = RIGHT SIDE CUT (L) = LEFT SIDE CUT
- T — T = SHIFTED TIE STRIPS

NOTE:
FOR "M" AND "N" HEIGHT PANELS AT THE TOP OF A WALL, THE PANELS SHALL BE PLACED, CLAMPED AND BACKFILLED TO AT LEAST 10" ABOVE BOTTOM ROW OF TIE STRIPS EMBEDDED IN THE "M" OR "N" PANEL WITHIN THE SAME DAY. NO "M" OR "N" HEIGHT PANEL SHALL BE PLACED AND CLAMPED AND THEN LEFT OVERNIGHT WITHOUT ALSO PLACING AT LEAST 10" OF BACKFILL OVER THE BOTTOM ROW OF REINFORCING STRIPS. AS AN ALTERNATIVE TO THIS BACKFILL REQUIREMENT, THE "M" OR "N" PANEL MAY BE EXTERNALLY BRACED IN ADDITION TO BEING CLAMPED TO ADJACENT PANELS.

1	9/24/19	REVISED PER E.L. ROBINSON COMMENT
2	10/4/19	MISCELLANEOUS CLARIFICATION

This drawing contains information proprietary to The Reinforced Earth Company, and is being furnished for the use of The Ohio Department of Transportation only in connection with this project, and the information contained is not to be transmitted to any other organization unless specifically authorized in writing by The Reinforced Earth Company. The Reinforced Earth Company is the exclusive licensee in the United States under patents held by our affiliated companies, and the furnishing of this drawing does not constitute an expressed or implied license under any applicable patents.

The design contained on these drawings is based on information provided by the Owner. On the basis of this information, The Reinforced Earth Company has designed, and is responsible for the internal stability of the structure only. External stability, including foundation (bearing capacity and settlement) and global stability (including sliding and rotation), is the responsibility of the Owner.

CERTIFIED WITH RESPECT TO INTERNAL STABILITY OF REINFORCED EARTH STRUCTURES ONLY.

STATE OF OHIO
NICHOLAS A. DENI
E-75930
REGISTERED PROFESSIONAL ENGINEER
11/8/19

REINFORCED EARTH®
12001 Sunrise Valley Drive, Suite 400, Reston, VA 20191 (703) 547-8797
"REINFORCED EARTH®" AND THE REINFORCED EARTH LOGO ARE REGISTERED TRADEMARKS OF THE REINFORCED EARTH COMPANY.

DATE: 9/6/19
REVIEWED: ND
PID No: 96833
DRAWN: CAA
REVISED:
DESIGNED: CAA
CHECKED: ND

WALL 4CD ELEVATION
CUY-IR490/SR10-2.09/19.28
CUYAHOGA COUNTY

CUY-IR490/SR10-2.09/19.28

RE-18631

R:\RE18631_RLA_OH_CUY-IR 490\WALL PLANS\Wall 4CD.dwg

BACKWALL TIE STRIP AND REINFORCING STRIP CHART

WALL NAME	DISTANCE (FT.)		REINF. STRIP LENGTH (FT.)	HORIZONTAL SPACING	TIE STRIP QUANTITY PER LEVEL	TOTAL/ ABUT.	NOTE AND DIAGRAM
REAR ABUTMENT EASTBOUND (4AB)	D1	1.00	17	1.13	67	134	ABUTMENT BACKWALL STRIPS SPACING STRIP LENGTH AND QUANTITY.
	D2	2.00	17	1.13	67		

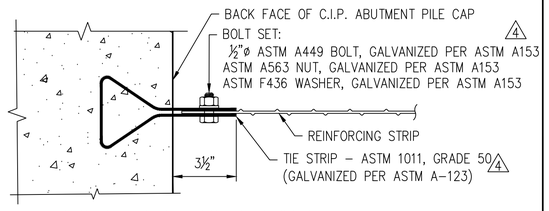

TIE STRIP PLACEMENT DETAIL
SCALE: NONE

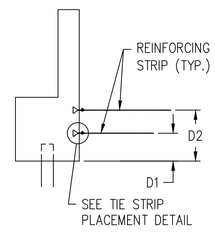

NOTE:– THE FIRST TIE STRIP SHALL BE PLACED 6" MIN. FROM EDGE OF BACKWALL.

BACKWALL TIE STRIP AND REINFORCING STRIP CHART

WALL NAME	DISTANCE (FT.)		REINF. STRIP LENGTH (FT.)	HORIZONTAL SPACING	TIE STRIP QUANTITY PER LEVEL	TOTAL/ ABUT.	NOTE AND DIAGRAM
REAR ABUTMENT WESTBOUND (4AB)	D1	1.00	12	0.87	53	106	ABUTMENT BACKWALL STRIPS SPACING STRIP LENGTH AND QUANTITY.
	D2	2.00	12	0.87	53		

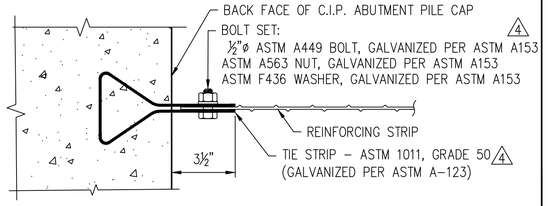

TIE STRIP PLACEMENT DETAIL
SCALE: NONE

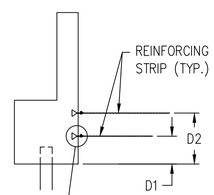

NOTE:– THE FIRST TIE STRIP SHALL BE PLACED 6" MIN. FROM EDGE OF BACKWALL.

BACKWALL TIE STRIP AND REINFORCING STRIP CHART

WALL NAME	DISTANCE (FT.)		REINF. STRIP LENGTH (FT.)	HORIZONTAL SPACING	TIE STRIP QUANTITY PER LEVEL	TOTAL/ ABUT.	NOTE AND DIAGRAM
FORWARD ABUTMENT WESTBOUND (4CD)	D1	1.25	16	1.13	81	162	ABUTMENT BACKWALL STRIPS SPACING STRIP LENGTH AND QUANTITY.
	D2	2.25	16	1.13	81		

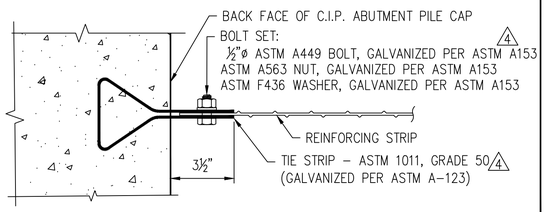

TIE STRIP PLACEMENT DETAIL
SCALE: NONE

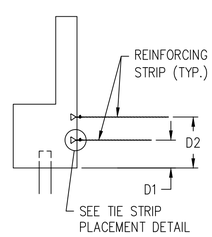

NOTE:– THE FIRST TIE STRIP SHALL BE PLACED 6" MIN. FROM EDGE OF BACKWALL.

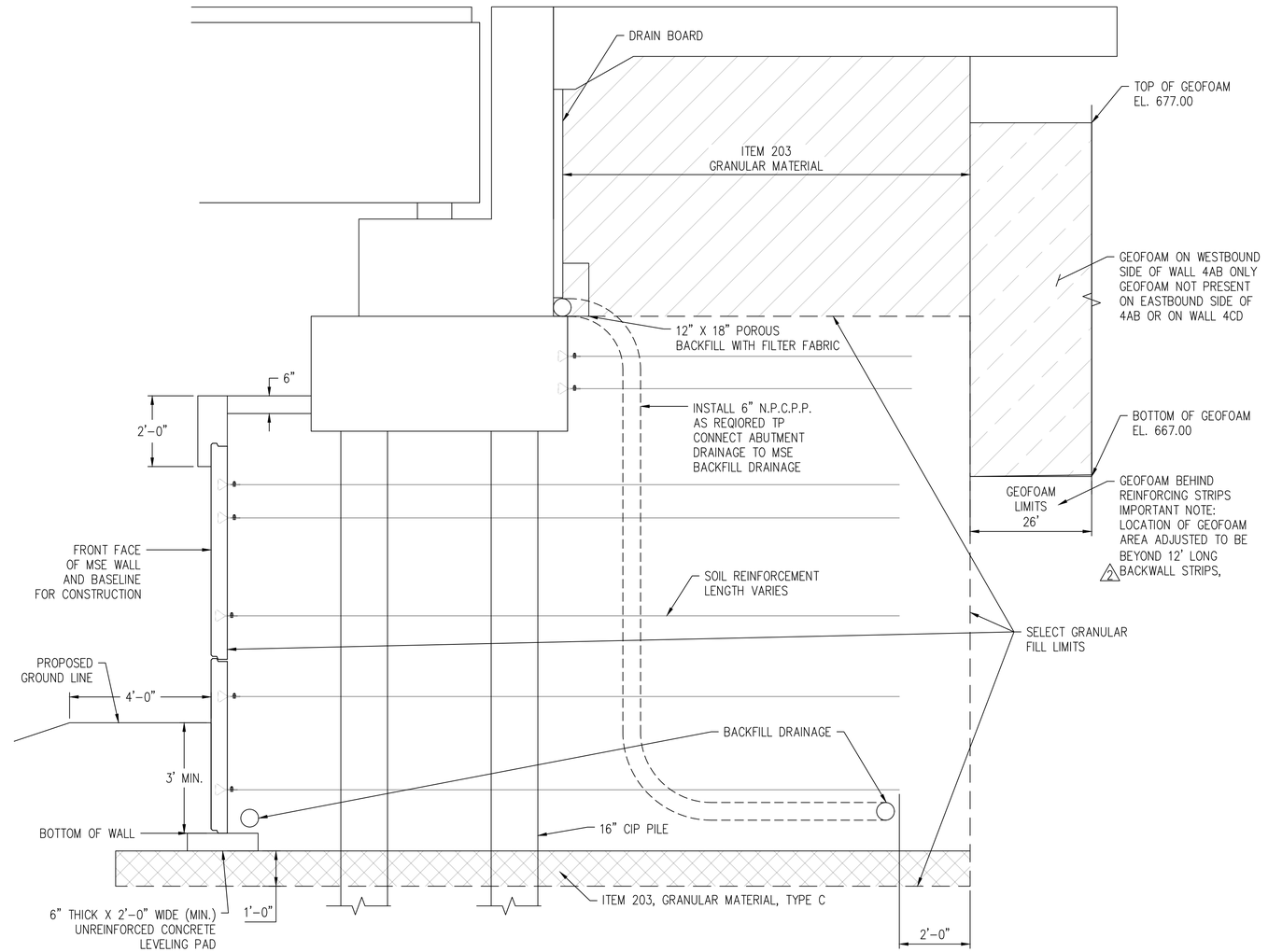

MSE ABUTMENT SECTION
SCALE: ½" = 1'–0"

2	10/4/19	MISCELLANEOUS CLARIFICATION
4	11/6/19	REVISED PER ODOT COMMENT

This drawing contains information proprietary to The Reinforced Earth Company, and is being furnished for the use of The Ohio Department of Transportation only in connection with this project, and the information contained is not to be transmitted to any other organization unless specifically authorized in writing by The Reinforced Earth Company. The Reinforced Earth Company is the exclusive licensee in the United States under patents held by our affiliated companies, and the furnishing of this drawing does not constitute an expressed or implied license under any applicable patents.

The design contained on these drawings is based on information provided by the Owner. On the basis of this information, The Reinforced Earth Company has designed, and is responsible for the internal stability of the structure only. External stability, including foundation (bearing capacity and settlement) and global stability (including sliding and rotation), is the responsibility of the Owner.

CERTIFIED WITH RESPECT TO INTERNAL STABILITY OF REINFORCED EARTH STRUCTURES ONLY.

STATE OF OHIO
NICHOLAS A. DENI
E-75930
REGISTERED PROFESSIONAL ENGINEER
11/8/19

REINFORCED EARTH®
12001 Sunrise Valley Drive, Suite 400, Reston, VA 20191 (703) 547-8797
"REINFORCED EARTH®" AND THE REINFORCED EARTH LOGO ARE REGISTERED TRADEMARKS OF THE REINFORCED EARTH COMPANY.

DATE: 9/6/19
REVIEWED: ND
PID No: 96833
DRAWN: CAA
REVISED:
DESIGNED: CAA
CHECKED: ND

ABUTMENT TYPICAL SECTION
CUY–IR490/SR10–2.09/19.28
CUYAHOGA COUNTY

CUY–IR490/SR10–2.09/19.28

RE–18631

R:\RE18631_RLA_OH_CUY-IR 490\WALL PLANS\DETAILS.dwg

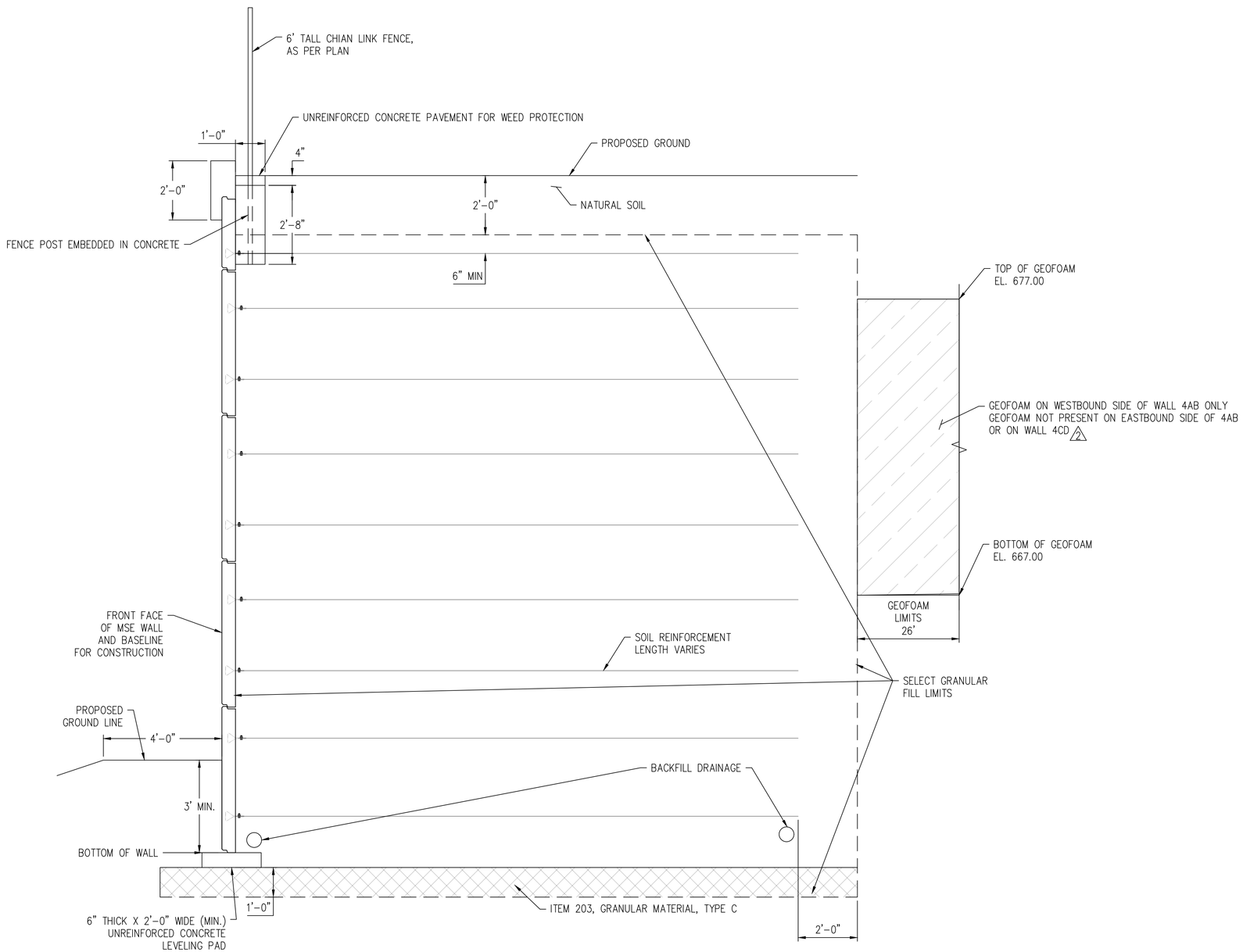

MSE WALL SECTION

SCALE: ½" = 1'-0"

2	10/4/19	MISCELLANEOUS CLARIFICATION

This drawing contains information proprietary to The Reinforced Earth Company, and is being furnished for the use of The Ohio Department of Transportation only in connection with this project, and the information contained is not to be transmitted to any other organization unless specifically authorized in writing by The Reinforced Earth Company. The Reinforced Earth Company is the exclusive licensee in the United States under patents held by our affiliated companies, and the furnishing of this drawing does not constitute an expressed or implied license under any applicable patents.

The design contained on these drawings is based on information provided by the Owner. On the basis of this information, The Reinforced Earth Company has designed, and is responsible for the internal stability of the structure only. External stability, including foundation (bearing capacity and settlement) and global stability (including sliding and rotation), is the responsibility of the Owner.

CERTIFIED WITH RESPECT TO INTERNAL STABILITY OF REINFORCED EARTH STRUCTURES ONLY.

STATE OF OHIO
NICHOLAS A. DENI
E-75930
REGISTERED PROFESSIONAL ENGINEER
11/8/19

REINFORCED EARTH®
12001 Sunrise Valley Drive, Suite 400, Reston, VA 20191 (703) 547-8797
"REINFORCED EARTH" AND THE REINFORCED EARTH LOGO ARE REGISTERED TRADEMARKS OF THE REINFORCED EARTH COMPANY.

DATE: 9/6/19
REVIEWED: ND
PID No: 96833
DRAWN: CAA
REVISED:
DESIGNED: CAA
CHECKED: ND

MSE WALL TYPICAL SECTION
CUY-IR490/SR10-2.09/19.28
CUYAHOGA COUNTY

CUY-IR490/SR10-2.09/19.28

RE-18631

R:\RE18631_RLA_OH_CUY-IR 490\WALL PLANS\DETAILS.dwg

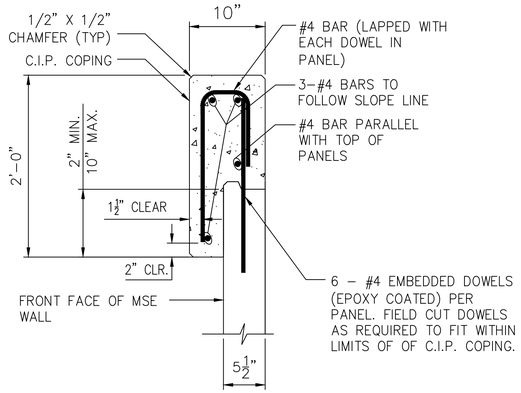

C.I.P. COPING DETAIL

SCALE: 1-1/2" = 1'-0"

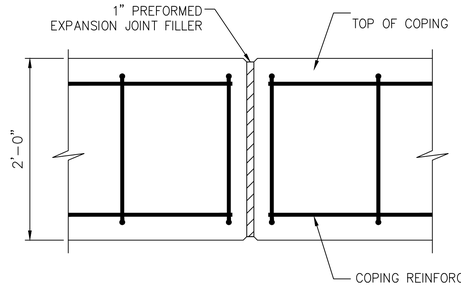

COPING EXPANSION JOINT - ELEVATION

NOT TO SCALE

COPING JOINTS SHALL ALIGN WITH JOINTS BETWEEN MSE WALL PANELS. COPING JOINTS SHALL NOT BE LOCATED MORE THAN 20 FEET APART. THE CONTRACTOR SHALL COORDINATE JOINT LAYOUT WITH DETAILS OF ACTUAL PROPRIETARY WALL CONSTRUCTED.

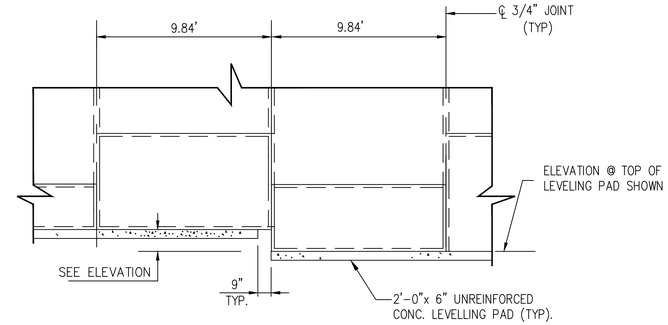

TYPICAL LEVELING PAD STEP DETAIL

SCALE : N.T.S.

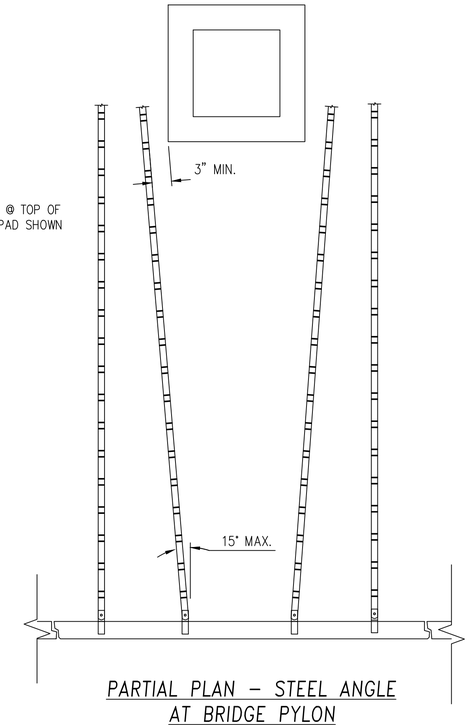

PARTIAL PLAN - STEEL ANGLE AT BRIDGE PYLON

SCALE: 1" = 1'-0"

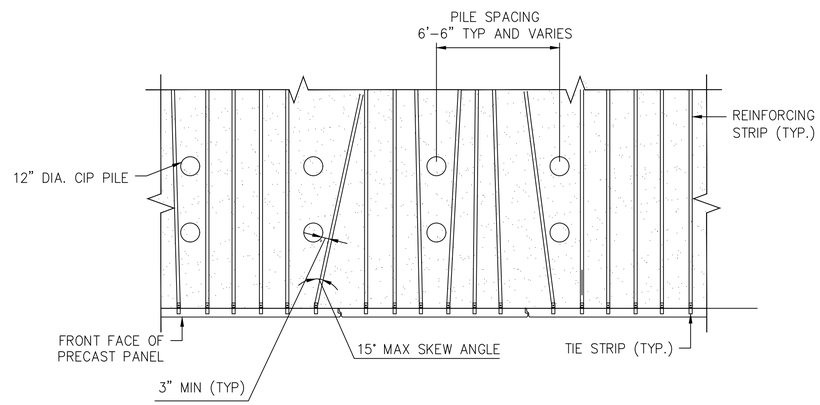

TYPICAL REINFORCING STRIP SKEW DETAIL AT PILES

SCALE: ¼" = 1'-0"

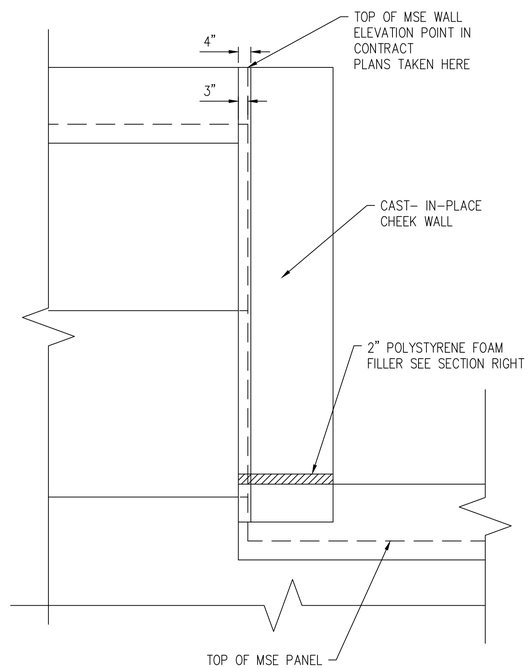

CORNER COPING DETAIL ELEVATION VIEW

SCALE: ½" = 1'-0"

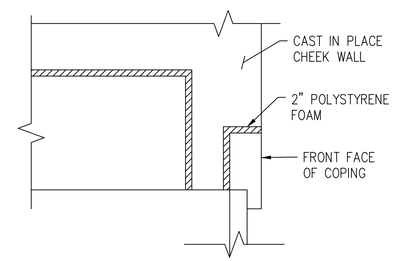

CORNER COPING DETAIL SECTION VIEW

SCALE: ½" = 1'-0"

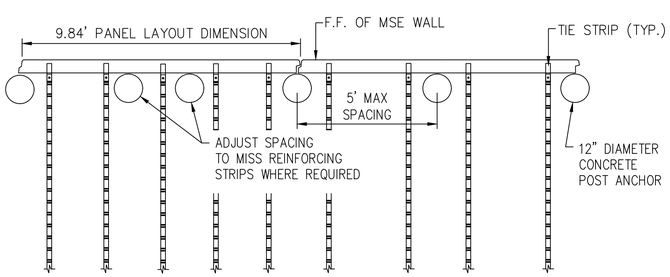

NOTE:

A. PRIOR TO PLACING FENCE POST FOUNDATIONS, CONTRACTOR SHALL MARK LOCATION ON BACK-FACE OF WALL AND SKEW REINFORCING STRIPS TO AVOID THE OBSTRUCTION. OR PLACE SONOTUBE/PVC PIPE FOR FUTURE FENCE POST PLACEMENT, SUCH THAT PLACEMENT OF REINFORCING STRIPS IS NOT OBSTRUCTED.

B. IT IS THE CONTRACTOR'S RESPONSIBILITY TO DETERMINE THE LOCATION OF FENCE POST BEHIND THE REINFORCED EARTH PANELS PRIOR TO PLACEMENT OF THE TOP THREE LEVELS OF REINFORCING STRIPS. ANY DAMAGE DONE TO THE REINFORCING STRIPS DUE TO THE INSTALLATION OF GUARD RAIL SHALL BE REPAIRED BY THE CONTRACTOR AT THE CONTRACTOR'S EXPENSE.

FENCE POSTS BEHIND WALL

SCALE 3/8" = 1'-0"

This drawing contains information proprietary to The Reinforced Earth Company, and is being furnished for the use of The Ohio Department of Transportation only in connection with this project, and the information contained is not to be transmitted to any other organization unless specifically authorized in writing by The Reinforced Earth Company. The Reinforced Earth Company is the exclusive licensee in the United States under patents held by our affiliated companies, and the furnishing of this drawing does not constitute an expressed or implied license under any applicable patents.

The design contained on these drawings is based on information provided by the Owner. On the basis of this information, The Reinforced Earth Company has designed, and is responsible for the internal stability of the structure only. External stability, including foundation (bearing capacity and settlement) and global stability (including sliding and rotation), is the responsibility of the Owner.

CERTIFIED WITH RESPECT TO INTERNAL STABILITY OF REINFORCED EARTH STRUCTURES ONLY.

STATE OF OHIO
NICHOLAS A. DENI
E-75930
REGISTERED PROFESSIONAL ENGINEER
11/8/19

REINFORCED EARTH®
12001 Sunrise Valley Drive, Suite 400, Reston, VA 20191 (703) 547-8797
"REINFORCED EARTH®" AND THE REINFORCED EARTH LOGO ARE REGISTERED TRADEMARKS OF THE REINFORCED EARTH COMPANY.

DATE: 9/6/19	
REVIEWED: ND	PID No: 96833
DRAWN: CAA	REVISED:
DESIGNED: CAA	CHECKED: ND

TYPICAL DETAILS
CUY-IR490/SR10-2.09/19.28
CUYAHOGA COUNTY

CUY-IR490/SR10-2.09/19.28

RE-18631

R:\RE18631_RLA_OH_CUY-IR 490\WALL PLANS\DETAILS.dwg

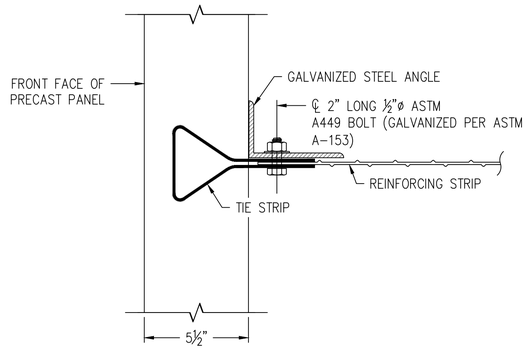

SECTION X-X (ANGLE BOLTED TO TIE STRIP WITH REINFORCING STRIP)

SCALE: 3" = 1'-0"

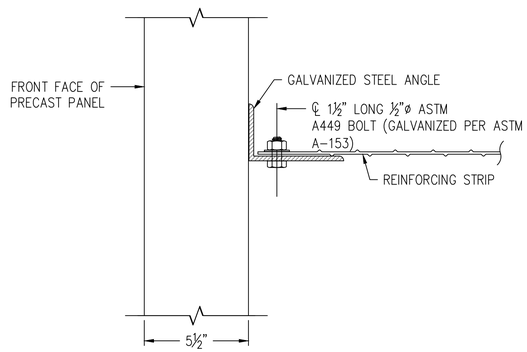

SECTION Y-Y (RELOCATED REINFORCING STRIP BOLTED TO ANGLE)

SCALE: 3" = 1'-0"

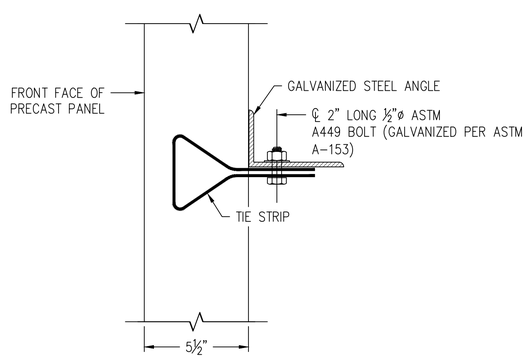

SECTION Z-Z (ANGLE BOLTED TO TIE STRIP WITHOUT REINFORCING STRIP)

SCALE: 3" = 1'-0"

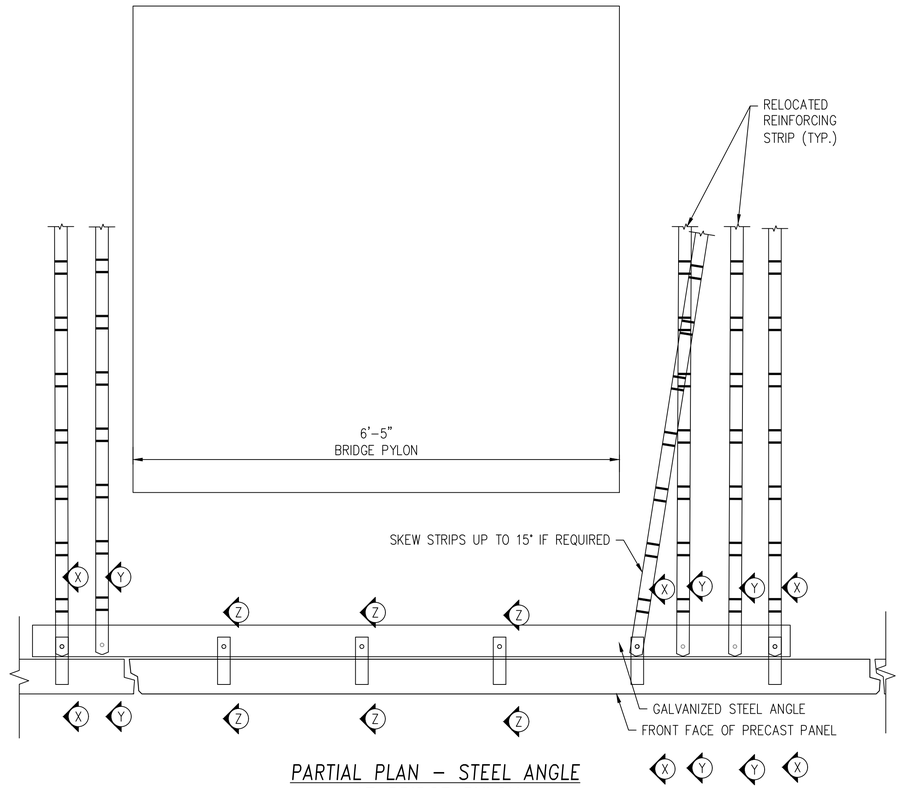

PARTIAL PLAN - STEEL ANGLE AT BRIDGE PYLON

SCALE: 1" = 1'-0"

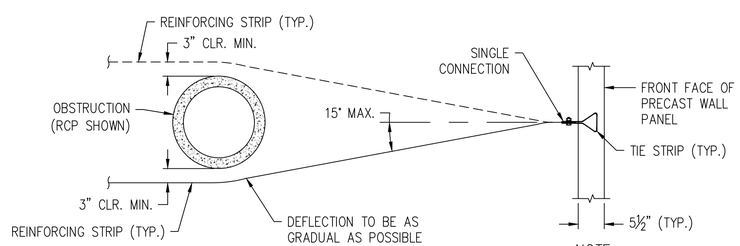

SECTION VIEW - STRIP SKEW DETAIL AT OBSTRUCTION

SCALE: ¾" = 1'-0"

NOTE:
ATTACH ONE REINFORCING STRIP PER TIE STRIP AND SKEW EITHER OVER OR UNDER OBSTRUCTION; WHICHEVER WILL RESULT IN A SMALLER SKEW ANGLE.

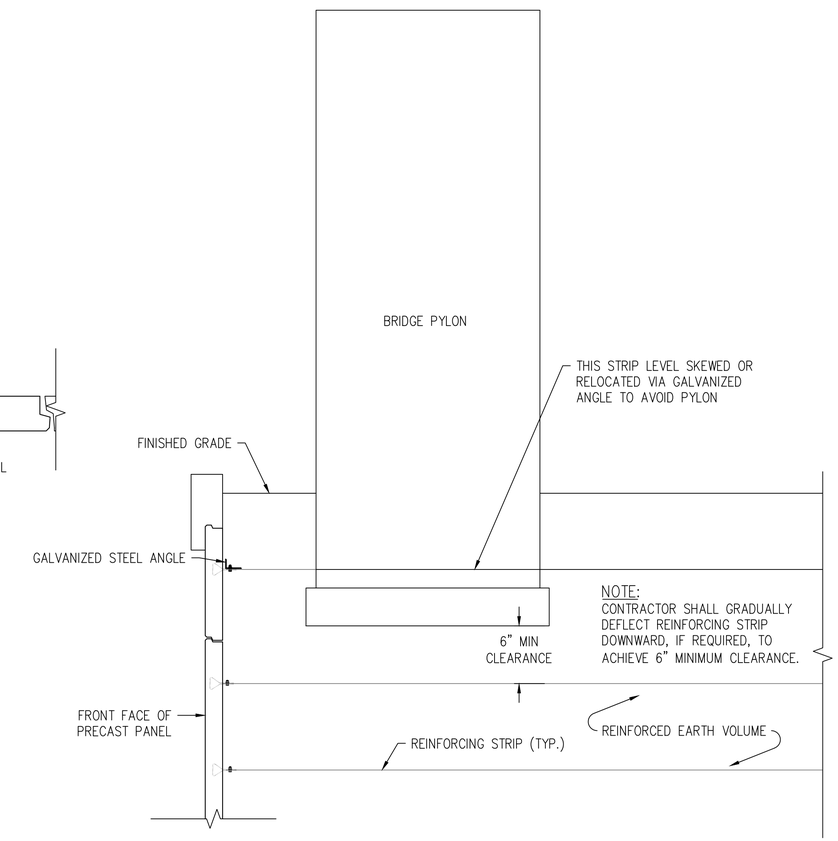

PARTIAL SECTION - STEEL ANGLE AT BRIDGE PYLON

SCALE: ½" = 1'-0"

CERTIFIED WITH RESPECT TO INTERNAL STABILITY OF REINFORCED EARTH STRUCTURES ONLY.

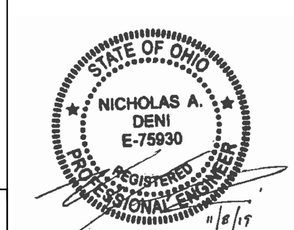

This drawing contains information proprietary to The Reinforced Earth Company, and is being furnished for the use of The Ohio Department of Transportation only in connection with this project, and the information contained is not to be transmitted to any other organization unless specifically authorized in writing by The Reinforced Earth Company. The Reinforced Earth Company is the exclusive licensee in the United States under patents held by our affiliated companies, and the furnishing of this drawing does not constitute an expressed or implied license under any applicable patents.

The design contained on these drawings is based on information provided by the Owner. On the basis of this information, The Reinforced Earth Company has designed, and is responsible for the internal stability of the structure only. External stability, including foundation (bearing capacity and settlement) and global stability (including sliding and rotation), is the responsibility of the Owner.

REINFORCED EARTH®
12001 Sunrise Valley Drive, Suite 400, Reston, VA 20191 (703) 547-8797
"REINFORCED EARTH®" AND THE REINFORCED EARTH LOGO ARE REGISTERED TRADEMARKS OF THE REINFORCED EARTH COMPANY.

DATE: 9/6/19	REVIEWED: ND	PID No: 96833
DRAWN: CAA	REVISED:	
DESIGNED: CAA	CHECKED: ND	

ANGLE DETAILS
CUY-IR490/SR10-2.09/19.28
CUYAHOGA COUNTY

CUY-IR490/SR10-2.09/19.28

RE-18631

R:\RE18631_RLA_OH_CUY-IR 490\WALL PLANS\DETAILS.dwg

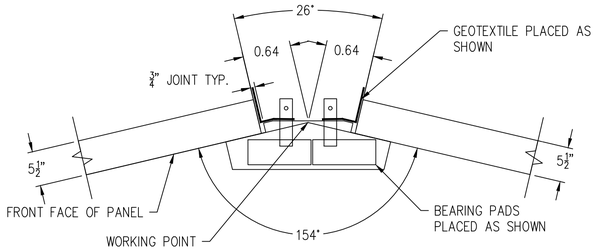

117° CORNER
WALL 4CD COL. 6
SCALE: 1" = 1'-0"

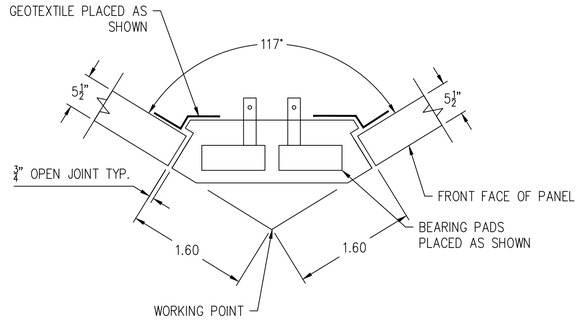

117° CORNER
WALL 4AB COL. 6 AND 8
SCALE: 1" = 1'-0"

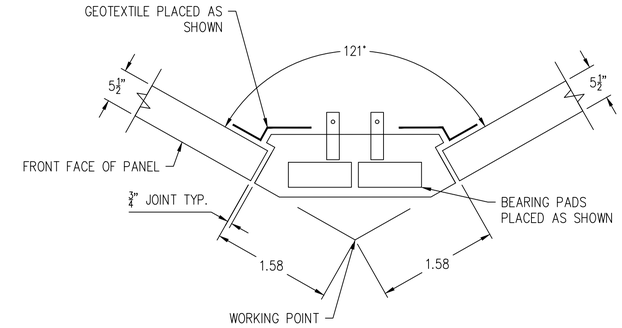

121° CORNER
WALL 4AB COL. 38
SCALE: 1" = 1'-0"

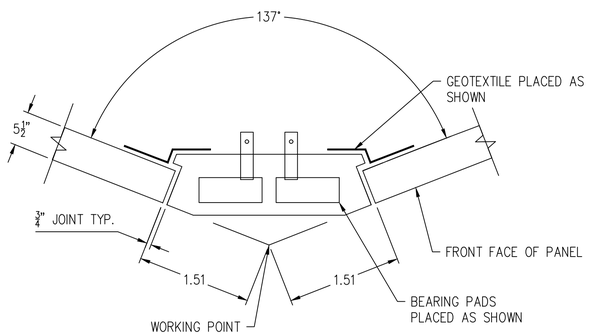

137° CORNER
WALL 4CD COL. 18
SCALE: 1" = 1'-0"

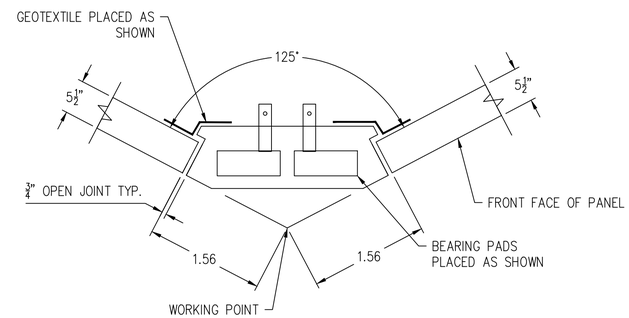

125° CORNER
WALL 4AB COL. 18
SCALE: 1" = 1'-0"

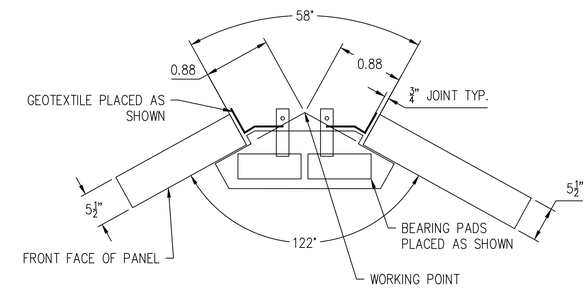

58° CORNER (122° INVERTED CORNER)
WALL 4AB COL. 30
SCALE: 1" = 1'-0"

CERTIFIED WITH RESPECT TO INTERNAL STABILITY OF REINFORCED EARTH STRUCTURES ONLY.

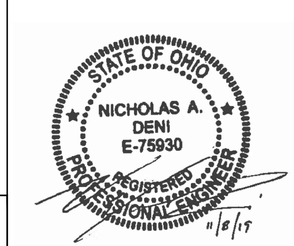

This drawing contains information proprietary to The Reinforced Earth Company, and is being furnished for the use of The Ohio Department of Transportation only in connection with this project, and the information contained is not to be transmitted to any other organization unless specifically authorized in writing by The Reinforced Earth Company. The Reinforced Earth Company is the exclusive licensee in the United States under patents held by our affiliated companies, and the furnishing of this drawing does not constitute an expressed or implied license under any applicable patents.

The design contained on these drawings is based on information provided by the Owner. On the basis of this information, The Reinforced Earth Company has designed, and is responsible for the internal stability of the structure only. External stability, including foundation (bearing capacity and settlement) and global stability (including sliding and rotation), is the responsibility of the Owner.

REINFORCED EARTH®
12001 Sunrise Valley Drive, Suite 400, Reston, VA 20191 (703) 547-8797
"REINFORCED EARTH℠" AND THE REINFORCED EARTH LOGO ARE REGISTERED TRADEMARKS OF THE REINFORCED EARTH COMPANY.

DESIGNED: CAA	DRAWN: CAA	REVIEWED: ND	DATE: 9/6/19
CHECKED: ND	REVISED:		PID No: 96833

CORNER ELEMENT DETAILS
CUY-IR490/SR10-2.09/19.28
CUYAHOGA COUNTY

CUY-IR490/SR10-2.09/19.28

RE-18631

R:\RE18631_RLA_OH_CUY-IR 490\WALL PLANS\DETAILS.dwg

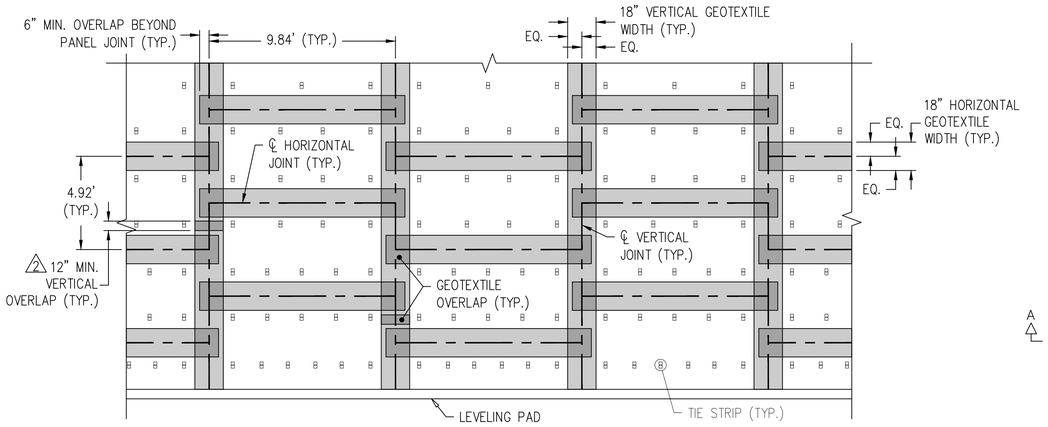

PARTIAL ELEVATION – BACK FACE – PANEL GEOTEXTILE DETAIL

SCALE: ¼" = 1'–0"

GEOTEXTILE PLACEMENT NOTES:

PROPER INSTALLATION OF PANEL GEOTEXTILE IS IMPERATIVE IN PREVENTING LOSS OF BACKFILL MATERIAL. CONTRACTOR SHALL FOLLOW THE GUIDELINES BELOW, AS WELL AS EXERCISE GOOD JUDGEMENT DURING WALL CONSTRUCTION.

- PANEL GEOTEXTILE SHALL BE FIRMLY AFFIXED TO BACK OF PANEL UNTIL BACKFILL PLACEMENT AND COMPACTION IS COMPLETE.
- AFFIX PANEL GEOTEXTILE TO BACK OF PANEL AS SHOWN USING ADHESIVE SUPPLIED BY THE REINFORCED EARTH Co.
- PANEL GEOTEXTILE SHALL BE APPROXIMATELY CENTERED ON JOINTS.
- 2 IN ALL CASES, PANEL GEOTEXTILE SHALL HAVE A 12" MIN. OVERLAP. IN ALL CASES, VERTICAL GEOTEXTILE SHALL OVERLAP HORIZONTAL GEOTEXTILE. WHEN TWO VERTICAL GEOTEXTILES OVERLAP, THE UPPER PIECE SHALL OVERLAP THE LOWER. UNDER NO CIRCUMSTANCES SHALL A GEOTEXTILE OVERLAP OCCUR ON A HORIZONTAL JOINT.
- PANEL GEOTEXTILE IS NOT REQUIRED AT THE INTERFACE BETWEEN PANEL AND LEVELING PAD UNLESS OTHERWISE NOTED IN THE DESIGN DRAWINGS.

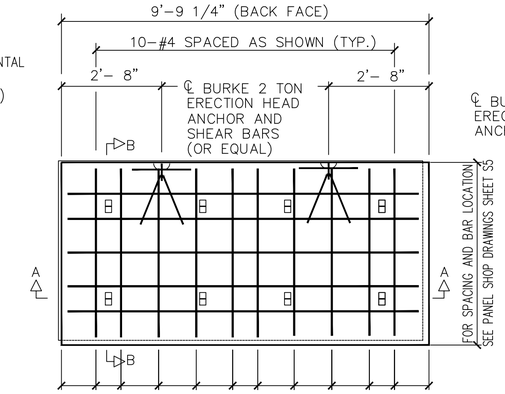

ELEVATION – BACK FACE

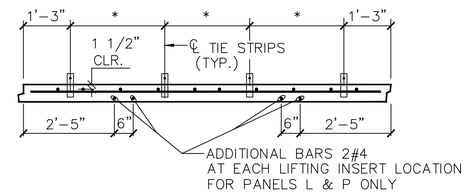

* FOR TIE STRIP SPACING SEE PANEL SHOP DRAWINGS SHEET S3

SECTION A–A

SCALE: 1/2" = 1'–0"

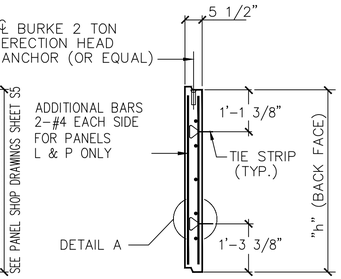

SECTION B–B

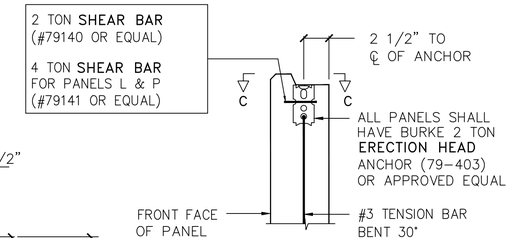

SECTION D–D ERECTION HEAD

SCALE 3"=1'

PANEL TYPE	"h"
A	4'–10 1/4"
C	1'–9 1/2"
D	2'–4 3/4"
E	3'– 0 1/4"
F	3'–7 1/2"
G	4'–3"
K	5'–5 3/4"
L/P	6'–1"

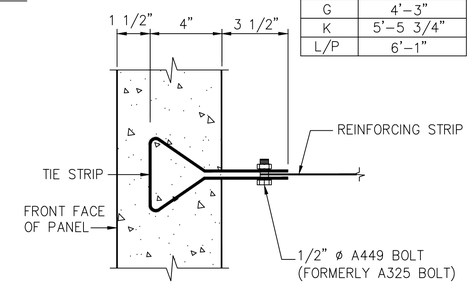

DETAIL A TIE STRIP EMBEDED IN PANEL

SCALE: 3"=1'–0"

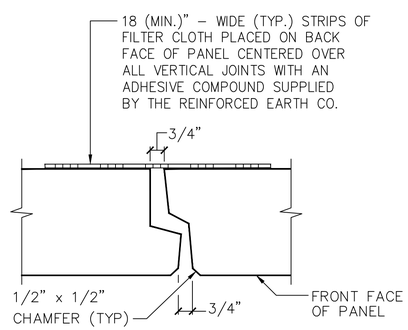

SECTION D–D VERTICAL JOINT

SCALE: 3"=1'–0"

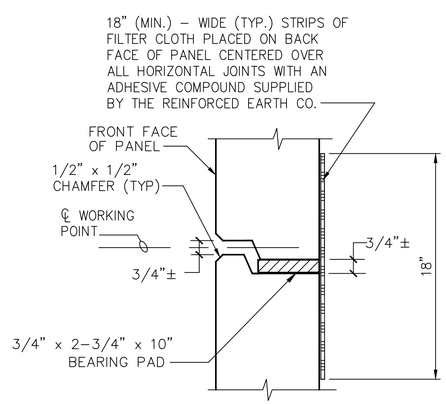

SECTION C–C HORIZONTAL JOINT

SCALE: 3"=1'–0"

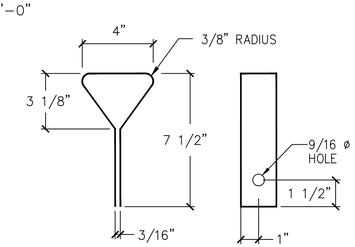

TIE STRIP DETAIL

SCALE: 3"=1'–0"

NOTES:

1. REINFORCING STEEL TO BE ASTM A615, GRADE 60, EPOXY COATED PER ASTM A775. 4
2. ALL PANEL TYPES AND OTHER RELATED ELEMENTS WILL BE DETAILED ON SHOP DRAWINGS.
3. ALL PANELS SHALL HAVE TWO LIFTING INSERTS OF MINIMUM TWO TON CAPACITY EACH.
4. PANEL DESIGN THICKNESS IS 5 1/2" THICKNESS OF CONCRETE MUST INCREASE TO ACCOMMODATE ANY ARCHITECTURAL SURFACE FINISH THAT MAY BE SPECIFIED.
5. CONCRETE COVER OVER ALL REINFORCEMENT TO BE 1 1/2" MINIMUM.

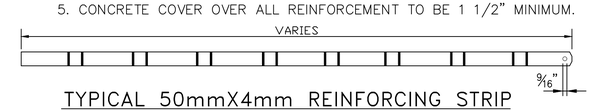

TYPICAL 50mmX4mm REINFORCING STRIP

NO SCALE

PANEL THICKNESS	REINFORCEMENT DESIGNATION	PANEL REINFORCEMENT (FOR PANEL TYPE "A")	MAXIMUM FACTORED HORIZONTAL STRESS AT BACK FACE OF PANEL (KSF)
5 1/2" (MIN.)	R4	10–#4 VERTICAL 5–#4 HORIZONTAL	3.50

CERTIFIED WITH RESPECT TO INTERNAL STABILITY OF REINFORCED EARTH STRUCTURES ONLY.

3	10/4/19	MISCELLANEOUS CLARIFICATION
4	11/6/19	REVISED PER MDOT COMMENT

This drawing contains information proprietary to The Reinforced Earth Company, and is being furnished for the use of The Ohio Department of Transportation only in connection with this project, and the information contained is not to be transmitted to any other organization unless specifically authorized in writing by The Reinforced Earth Company. The Reinforced Earth Company is the exclusive licensee in the United States under patents held by our affiliated companies, and the furnishing of this drawing does not constitute an expressed or implied license under any applicable patents.

The design contained on these drawings is based on information provided by the Owner. On the basis of this information, The Reinforced Earth Company has designed, and is responsible for the internal stability of the structure only. External stability, including foundation (bearing capacity and settlement) and global stability (including sliding and rotation), is the responsibility of the Owner.

REINFORCED EARTH®
12001 Sunrise Valley Drive, Suite 400, Reston, VA 20191 (703) 547-8797
"REINFORCED EARTH®" AND THE REINFORCED EARTH LOGO ARE REGISTERED TRADEMARKS OF THE REINFORCED EARTH COMPANY.

DATE: 9/6/19 | REVIEWED: ND | PID No: 96833
DRAWN: CAA | REVISED:
DESIGNED: CAA | CHECKED: ND

STANDARD PANEL DETAILS
CUY–IR490/SR10–2.09/19.28
CUYAHOGA COUNTY

CUY–IR490/SR10–2.09/19.28

RE–18631

R:\RE18631_RLA_OH_CUY–IR 490\WALL PLANS\DETAILS.dwg

REINFORCED EARTH®

SUSTAINABLE TECHNOLOGY

12001 Sunrise Valley Drive, Suite 400, Reston, VA 20191 (703) 547-8797

PRECAST PANEL SHOP DRAWINGS

4.92'x 9.84' RECTANGULAR PANELS

THE PRECASTER SHALL BE: NORWALK CONCRETE INDUSTRIES, NORWALK, OH

PANEL GENERAL NOTES

1) REINFORCING BARS SHALL BE ASTM A615 GRADE 60, EPOXY COATED PER ASTM A775.
2) CONCRETE FOR PRECAST PANELS SHALL HAVE A MINIMUM COMPRESSIVE STRENGTH AFTER 28 DAYS OF 4000 p.s.i., OR AS REQUIRED BY THE PROJECT SPECIAL PROVISIONS.
3) TIE STRIPS SHALL BE STEEL ASTM 1011, GRADE 50 (GALVANIZED PER ASTM A-123).
4) ALL FRONT EDGES OF PANELS SHALL HAVE A 1/2" CHAMFER.
5) TIE STRIPS SHALL BE PLACED WITHIN 1" OF THE DIMENSION SHOWN ON THE FABRICATION DRAWINGS.
6) PANEL DESIGN THICKNESS IS 5 1/2". THE QUANTITY OF CONCRETE WILL INCREASE TO ACCOMMODATE ANY ARCHITECTURAL SURFACE FINISH THAT MAY BE SPECIFIED.
7) VERTICAL REINFORCING BARS SHALL BE PLACED 1 1/2" (MIN.) CLEAR FROM THE BACK FACE OF THE PANEL.
8) ALL REINFORCING BARS SHALL BE STOPPED 1 1/2" (MIN.) CLEAR FROM ANY EDGE OF PANEL UNLESS NOTED ON INDIVIDUAL FABRICATION DRAWING.
9) ALL INDIVIDUAL FABRICATION DRAWINGS ARE SHOWN BACK FACE.
10) IF COPING DOWELS ARE REQUIRED, USE 2'-0" LONG, SIX (6) PER FULL-WIDTH PANEL.
11) KEY TO PIECE MARK:

AAL-4-7.50'-D

- PANEL TYPE
- MODIFICATION (ONE OR MORE)
- NUMBER OF TIE STRIPS
- PANEL WIDTH
- DOWEL IN PANEL

PANEL TOLERANCES	
PANEL DIMENSIONS	± 1/8 INCH (3mm)
PANEL SQUARENESS (DIFFERENCE BETWEEN TWO DIAGONALS)	± 1/4 INCH (6mm)
PANEL THICKNESS	± 1/8 INCH (3mm)
LOCATION OF SOIL REINFORCEMENT CONNECTION DEVICE	± 1/4 INCH (6mm)
PANEL SURFACE (SIZE OF SURFACE DEFECT MEASURED OVER A LENGTH OF 5 FT (1.5 M))	
SMOOTH FORMED FINISH	± 1/8 INCH (3mm)
TEXTURED FINISH	± 5/16 INCH (8mm)
POSITION OF REINFORCING STEEL	± 1/8 INCH (3mm)

CERTIFIED WITH RESPECT TO INTERNAL STABILITY OF REINFORCED EARTH STRUCTURES ONLY.

STATE OF OHIO
NICHOLAS A. DENI
E-75930
REGISTERED PROFESSIONAL ENGINEER
11/8/19

NO.	DATE	REVISION DESCRIPTION
1	9/24/19	REVISED PER E.L. ROBINSON COMMENT
2	10/28/19	MISCELLANEOUS CLARIFICATIONS
3	11/6/19	REVISED PER ODOT COMMENT

This drawing contains information proprietary to The Reinforced Earth Company, and is being furnished for the use of The Ohio Department of Transportation only in connection with this project, and the information contained is not to be transmitted to any other organization unless specifically authorized in writing by The Reinforced Earth Company. The Reinforced Earth Company is the exclusive licensee in the United States under patents held by our affiliated companies, and the furnishing of this drawing does not constitute an expressed or implied license under any applicable patents.

The design contained on these drawings is based on information provided by the Owner. On the basis of this information, The Reinforced Earth Company has designed, and is responsible for the internal stability of the structure only. External stability, including foundation (bearing capacity and settlement) and global stability (including sliding and rotation), is the responsibility of the Owner.

REINFORCED EARTH®
SUSTAINABLE TECHNOLOGY
12001 Sunrise Valley Drive, Suite 400, Reston, VA 20191 (703) 547-8797
"REINFORCED EARTH®" IS A REGISTERED TRADEMARK OF THE REINFORCED EARTH COMPANY.

DESIGNED	DRAWN	REVIEWED	DATE:
CAA	KC	ND	09/06/2019
CHECKED	REVISED	STRUCTURE FILE NUMBER:	
CAA		96833	

GENERAL NOTES
CUY-IR490/SR10-2.09/19.28
CUYAHOGA COUNTY

CUY-IR490
SR10-2.09/19.28

RE-18631

PANEL THICKNESS	REINFORCEMENT DESIGNATION	PANEL REINFORCEMENT (FOR PANEL TYPE "A")	MAXIMUM FACTORED HORIZONTAL STRESS AT BACK FACE OF PANEL (KSF)
5 1/2"	R4	10-#4 VERTICAL 5-#4 HORIZONTAL (EPOXY COATED).	3.50

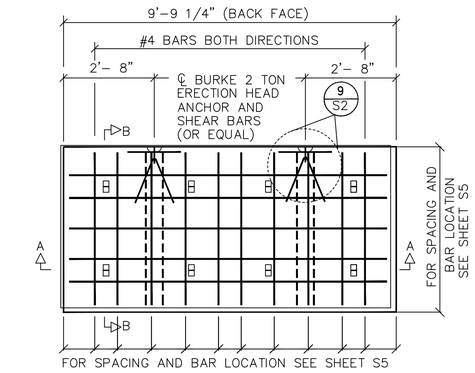

ELEVATION – BACK FACE

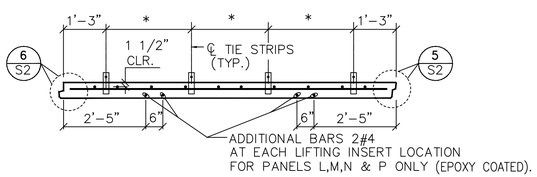

* FOR TIE STRIP SPACING SEE SHEET S3

SECTION A–A
SCALE: 1/2" = 1'-0"

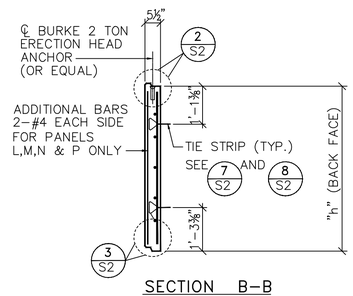

SECTION B–B

PANEL TYPE	"h"
A	4'-10 1/4"
C	1'-9 1/2"
D	2'-4 3/4"
E/S	3'- 0 1/4"
F	3'-7 1/2"
G	4'-3"
K	5'-5 3/4"
L/P	6'-1"
M	6'-8 1/2"
N	7'-3 3/4"

NOTE:
CONCRETE COVER ON ALL REINFORCEMENT TO BE 1 1/2" MIN.

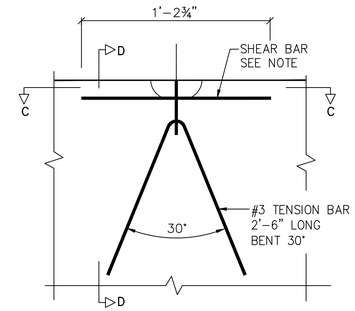

9 S2 TENSION BAR DETAIL

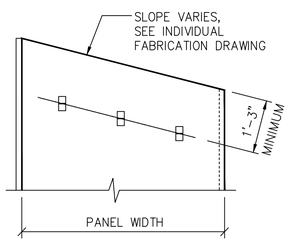

SLOPE TOP PANELS

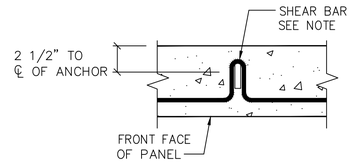

SECTION C–C

NOTE:
SHEAR BAR AS PROVIDED BY BURKE (OR EQUAL) FOR USE WITH 2 TON, TWO HOLE, ERECTION HEAD ANCHOR SHEAR BAR #79140.

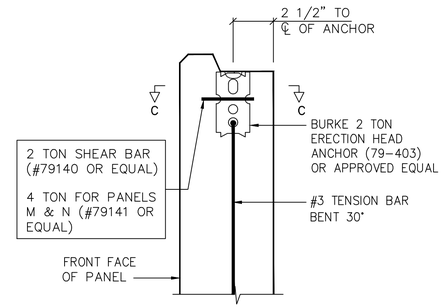

SECTION D–D
ERECTION HEAD
SCALE 3"=1'

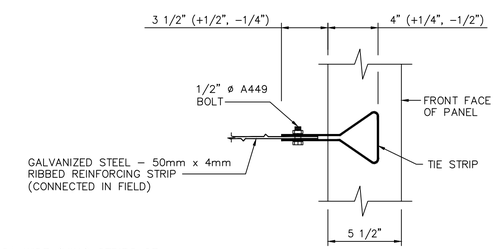

CONNECTION DETAIL

18"-WIDE (MIN.) STRIPS OF FILTER CLOTH PLACED ON BACK FACE OF PANEL CENTERED OVER ALL VERTICAL JOINTS WITH AN ADHESIVE COMPOUND SUPPLIED BY THE REINFORCED EARTH CO.

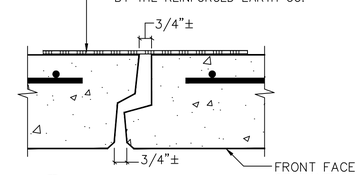

4 S2 VERTICAL JOINT
SCALE: 3"=1'-0"
(LOOKING UP PANEL)

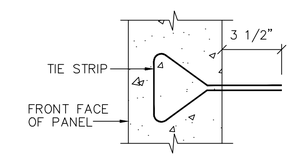

7 S2 SECTION TIE STRIP EMBEDDED IN PANEL
SCALE: 3"=1'-0"

18"-WIDE (MIN.) STRIPS OF FILTER CLOTH PLACED ON BACK FACE OF PANEL CENTERED OVER ALL HORIZONTAL JOINTS WITH AN ADHESIVE COMPOUND SUPPLIED BY THE REINFORCED EARTH CO.

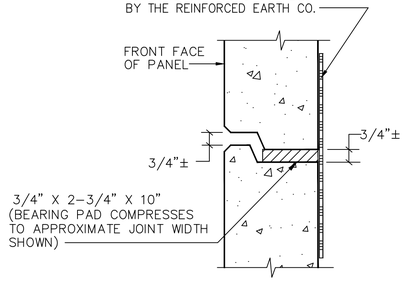

1 S2 HORIZONTAL JOINT
SCALE: 3"=1'-0"

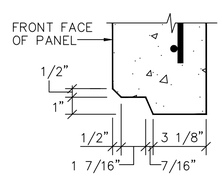

3 S2 SECTION @ PANEL BOTTOM
SCALE: 3"=1'-0"

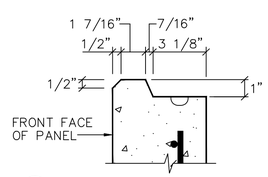

2 S2 SECTION @ PANEL TOP
SCALE: 3"=1'-0"

HORIZONTAL JOINT

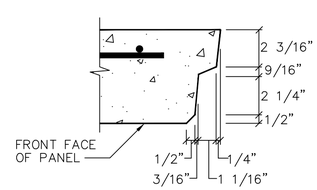

5 S2 SECTION @ PANEL RIGHT SIDE OF SECTION A–A
SCALE: 3"=1'-0"

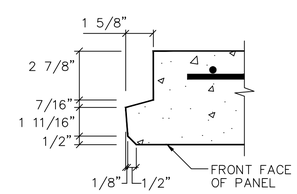

6 S2 SECTION @ PANEL LEFT SIDE OF SECTION A–A
SCALE: 3"=1'-0"

VERTICAL JOINT

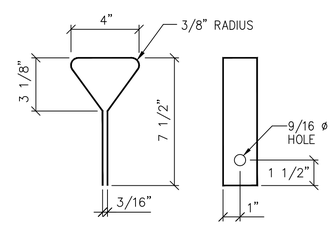

8 S2 TIE STRIP DETAIL
SCALE: 3"=1'-0"

NO.	DATE	REVISION DESCRIPTION

This drawing contains information proprietary to The Reinforced Earth Company, and is being furnished for the use of The Ohio Department of Transportation only in connection with this project, and the information contained is not to be transmitted to any other organization unless specifically authorized in writing by The Reinforced Earth Company. The Reinforced Earth Company is the exclusive licensee in the United States under patents held by our affiliated companies, and the furnishing of this drawing does not constitute an expressed or implied license under any applicable patents.

The design contained on these drawings is based on information provided by the Owner. On the basis of this information, The Reinforced Earth Company has designed, and is responsible for the internal stability of the structure only. External stability, including foundation (bearing capacity and settlement) and global stability (including sliding and rotation), is the responsibility of the Owner.

ReinforCed eARTH®
SUSTAINABLE TECHNOLOGY
12001 Sunrise Valley Drive, Suite 400, Reston, VA 20191 (703) 547-8797
"REINFORCED EARTH®" IS A REGISTERED TRADEMARK OF THE REINFORCED EARTH COMPANY.

DESIGNED	DRAWN	REVIEWED	DATE:
CAA	KC	ND	09/06/2019
CHECKED	REVISED	STRUCTURE FILE NUMBER:	
CAA		96833	

SECTION AND DETAILS
CUY-IR490/SR10-2.09/19.28
CUYAHOGA COUNTY

CUY-IR490
SR10-2.09/19.28

RE-18631

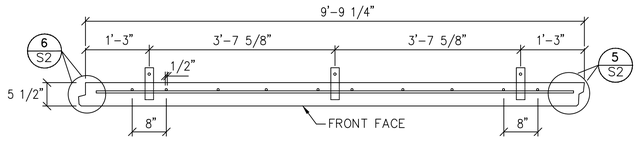

HORIZONTAL SECTION W/3 TIE STRIPS

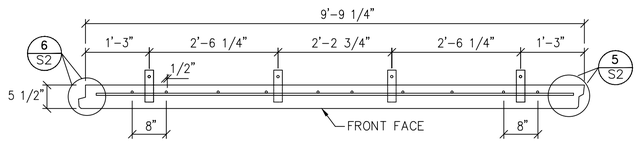

HORIZONTAL SECTION W/4 TIE STRIPS

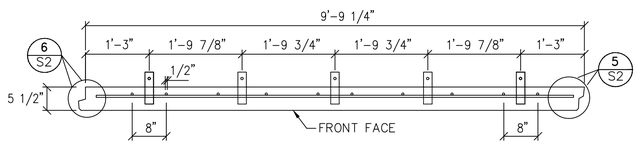

HORIZONTAL SECTION W/5 TIE STRIPS

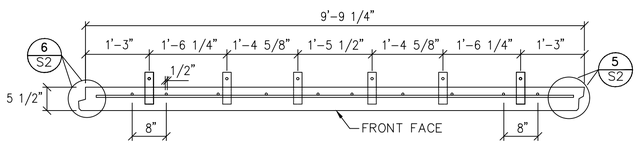

HORIZONTAL SECTION W/6 TIE STRIPS

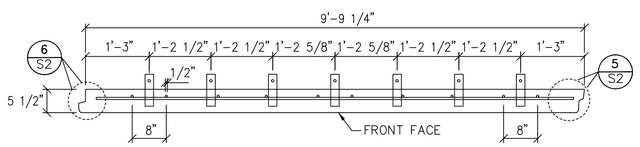

HORIZONTAL SECTION W/7 TIE STRIPS

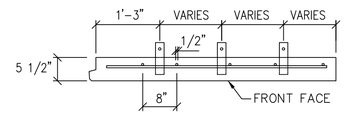

HORIZONTAL SECTION
LEFT CUT PANEL
(LOOKING UP PANEL)

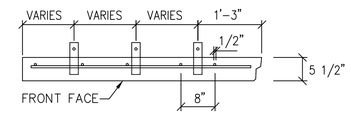

HORIZONTAL SECTION
RIGHT CUT PANEL
(LOOKING UP PANEL)

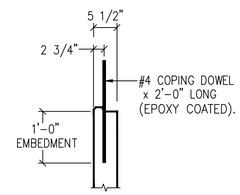

SECTION A–A
AT TOP W/DOWELS

NOTE:
USE EITHER STANDARD PANEL WITH LIP (AS SHOWN) OR FLAT TOP WITH FORM HEADER WHEN USING COPING DOWELS.

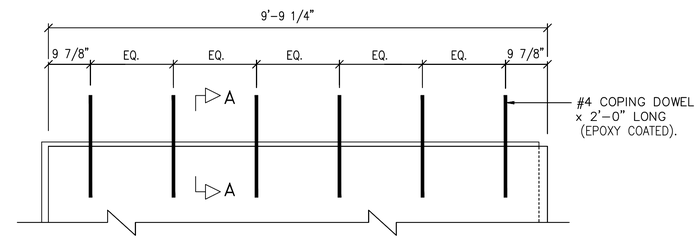

COPING DOWEL DETAILS
(BACK FACE)

NOTE:

1) ALL HORIZONTAL AND VERTICAL REBAR SHOWN IS #4, UNLESS OTHERWISE NOTED ON THE INDIVIDUAL PANEL DETAILS.

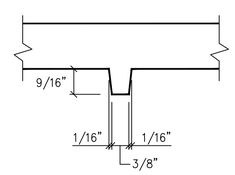

1 S3 BEARING PAD RECESS

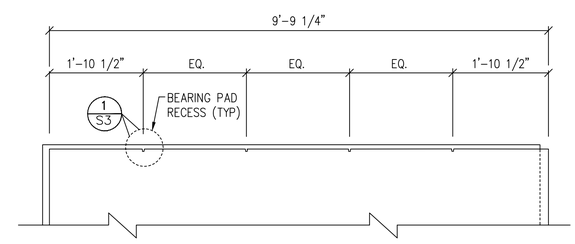

BEARING PAD DETAIL
(BACK FACE)

NO.	DATE	REVISION DESCRIPTION

This drawing contains information proprietary to The Reinforced Earth Company, and is being furnished for the use of The Ohio Department of Transportation only in connection with this project, and the information contained is not to be transmitted to any other organization unless specifically authorized in writing by The Reinforced Earth Company. The Reinforced Earth Company is the exclusive licensee in the United States under patents held by our affiliated companies, and the furnishing of this drawing does not constitute an expressed or implied license under any applicable patents.

The design contained on these drawings is based on information provided by the Owner. On the basis of this information, The Reinforced Earth Company has designed, and is responsible for the internal stability of the structure only. External stability, including foundation (bearing capacity and settlement) and global stability (including sliding and rotation), is the responsibility of the Owner.

ReinforCed eARTH®
SUSTAINABLE TECHNOLOGY
12001, Sunrise Valley Drive, Suite 400, Reston, VA 20191 (703) 547-8797
"REINFORCED EARTH®" IS A REGISTERED TRADEMARK OF THE REINFORCED EARTH COMPANY.

DESIGNED	DRAWN	REVIEWED	DATE:
CAA	KC	ND	09/06/2019
CHECKED	REVISED	STRUCTURE FILE NUMBER:	
CAA		96833	

SHOP DRAWINGS HORIZONTAL SECTIONS
CUY–IR490/SR10–2.09/19.28
CUYAHOGA COUNTY

CUY–IR490
SR10–2.09/19.28

RE–18631

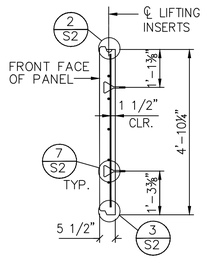

1 / S4 SECTION B–B PANEL "A"

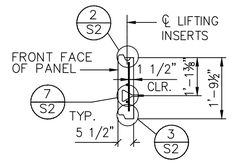

3 / S4 SECTION B–B PANEL "C"

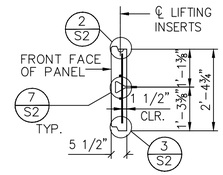

2 / S4 SECTION B–B PANEL "D"

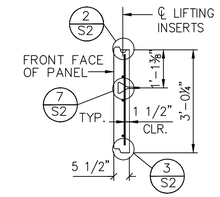

4 / S4 SECTION B–B PANEL "E"
"TOP PANEL ONLY"

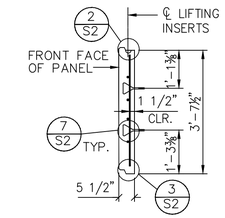

5 / S4 SECTION B–B PANEL "F"

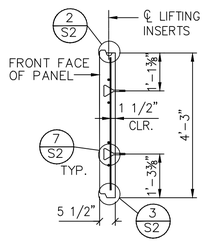

6 / S4 SECTION B–B PANEL "G"

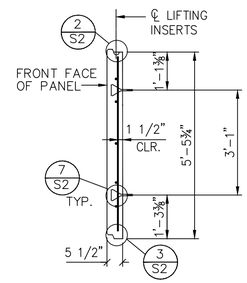

7 / S4 SECTION B–B PANEL "K"

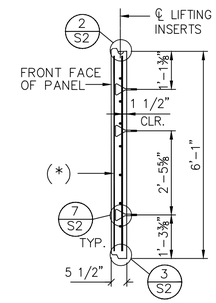

8 / S4 SECTION B–B PANEL "L"
∗ ADDITIONAL BARS 2#4 AT EACH LIFTING INSERT LOCATION

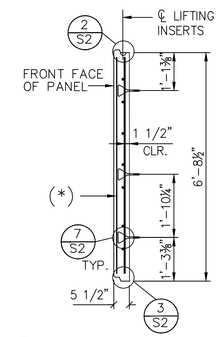

9 / S4 SECTION B–B PANEL "M"
∗ ADDITIONAL BARS 2#4 AT EACH LIFTING INSERT LOCATION

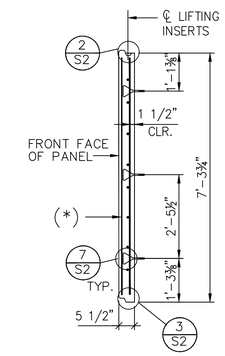

10 / S4 SECTION B–B PANEL "N"
∗ ADDITIONAL BARS 2#4 AT EACH LIFTING INSERT LOCATION

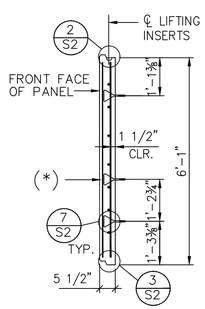

11 / S4 SECTION B–B PANEL "P"
"BOTTOM PANEL ONLY"
∗ ADDITIONAL BARS 2#4 AT EACH LIFTING INSERT LOCATION

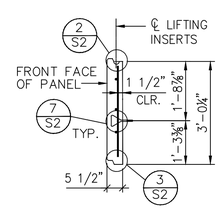

12 / S4 SECTION B–B PANEL "S"
"BOTTOM PANEL ONLY"

NOTE:
STANDARD PANEL THICKNESS OF 5 1/2" SHOWN. ADDITIONAL THICKNESS TO BE ADDED TO FRONT OF WALL PANELS FOR ARCHITECTURAL FINISH.

NO.	DATE	REVISION DESCRIPTION

This drawing contains information proprietary to The Reinforced Earth Company, and is being furnished for the use of The Ohio Department of Transportation only in connection with this project, and the information contained is not to be transmitted to any other organization unless specifically authorized in writing by The Reinforced Earth Company. The Reinforced Earth Company is the exclusive licensee in the United States under patents held by our affiliated companies, and the furnishing of this drawing does not constitute an expressed or implied license under any applicable patents.

The design contained on these drawings is based on information provided by the Owner. On the basis of this information, The Reinforced Earth Company has designed, and is responsible for the internal stability of the structure only. External stability, including foundation (bearing capacity and settlement) and global stability (including sliding and rotation), is the responsibility of the Owner.

REINFORCED EARTH®
SUSTAINABLE TECHNOLOGY
12001 Sunrise Valley Drive, Suite 400, Reston, VA 20191 (703) 547-8797
"REINFORCED EARTH®" IS A REGISTERED TRADEMARK OF THE REINFORCED EARTH COMPANY.

DESIGNED	DRAWN	REVIEWED	DATE:
CAA	KC	ND	09/06/2019
CHECKED	REVISED	STRUCTURE FILE NUMBER:	
CAA		96833	

SHOP DRAWINGS VERTICAL SECTIONS
CUY–IR490/SR10–2.09/19.28
CUYAHOGA COUNTY

CUY–IR490
SR10–2.09/19.28

RE–18631

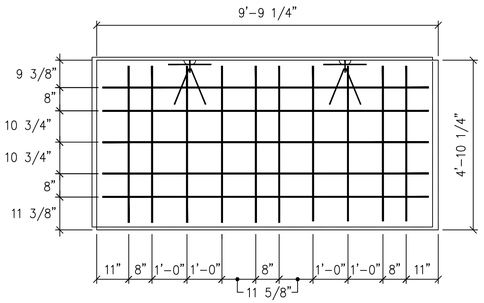

PANEL A

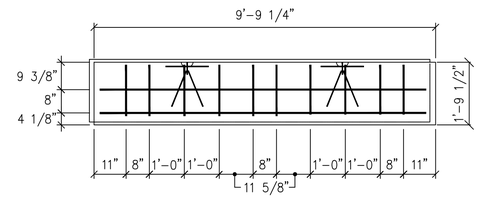

PANEL C

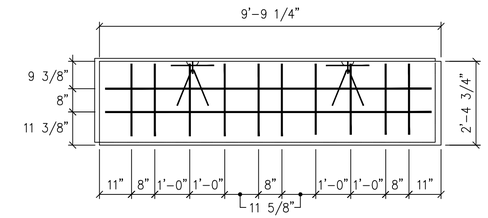

PANEL D

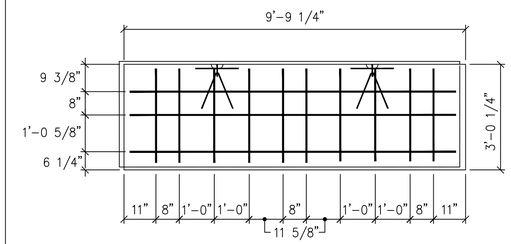

PANEL E

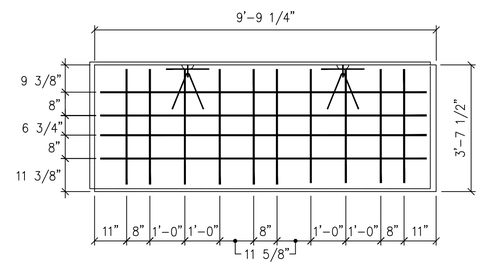

PANEL F

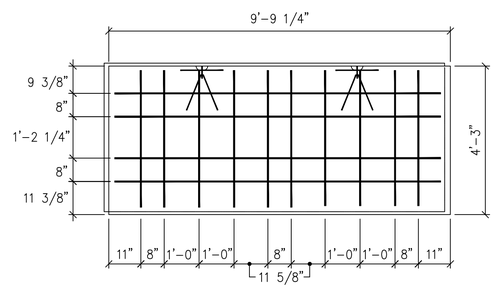

PANEL G

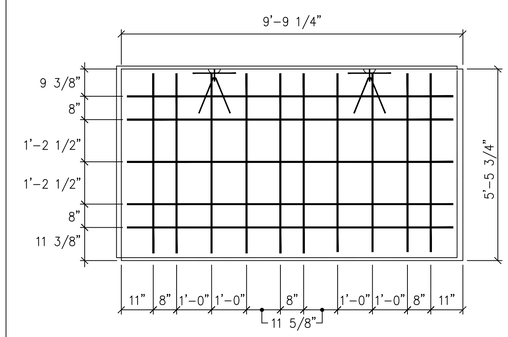

PANEL K

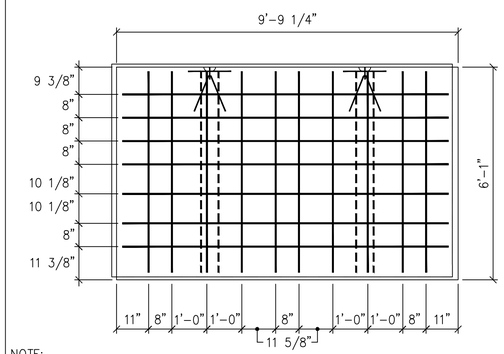

NOTE:
PROVIDE 2 ADDITIONAL #4 VERTICAL BARS AT EACH LIFTING INSERT NEAR FRONT FACE FOR HANDLING.

PANEL L

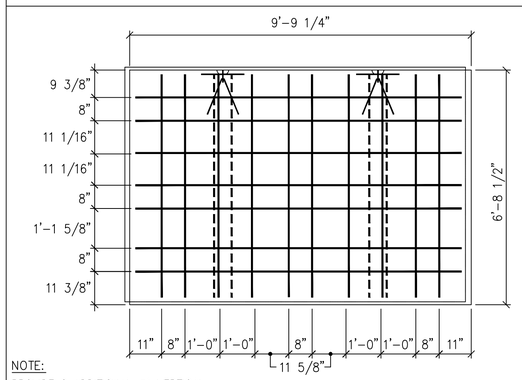

NOTE:
PROVIDE 2 ADDITIONAL #4 VERTICAL BARS AT EACH LIFTING INSERT NEAR FRONT FACE FOR HANDLING.

PANEL M

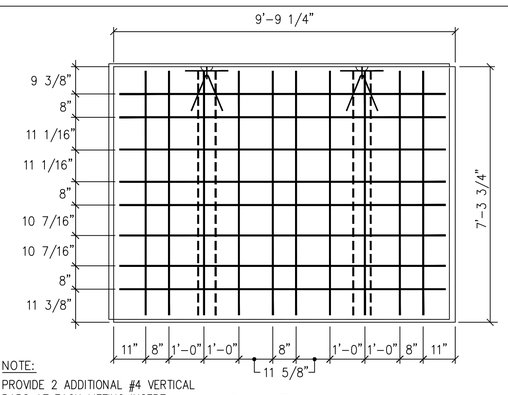

NOTE:
PROVIDE 2 ADDITIONAL #4 VERTICAL BARS AT EACH LIFTING INSERT NEAR FRONT FACE FOR HANDLING.

PANEL N

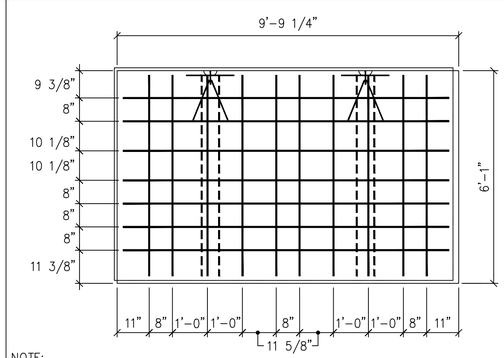

NOTE:
PROVIDE 2 ADDITIONAL #4 VERTICAL BARS AT EACH LIFTING INSERT NEAR FRONT FACE FOR HANDLING.

PANEL P

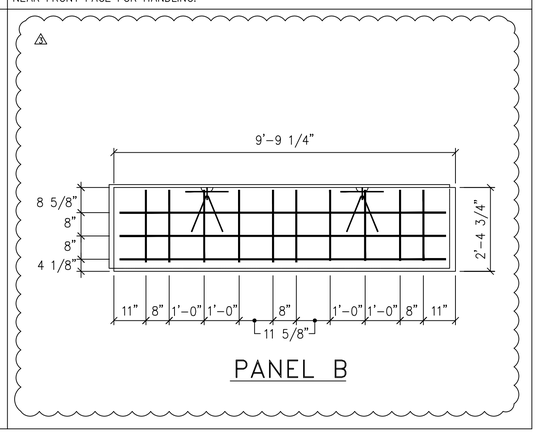

PANEL B

NO.	DATE	REVISION DESCRIPTION
1	10/28/19	MISCELLANEOUS CLARIFICATIONS

This drawing contains information proprietary to The Reinforced Earth Company, and is being furnished for the use of The Ohio Department of Transportation only in connection with this project, and the information contained is not to be transmitted to any other organization unless specifically authorized in writing by The Reinforced Earth Company. The Reinforced Earth Company is the exclusive licensee in the United States under patents held by our affiliated companies, and the furnishing of this drawing does not constitute an expressed or implied license under any applicable patents.

The design contained on these drawings is based on information provided by the Owner. On the basis of this information, The Reinforced Earth Company has designed, and is responsible for the internal stability of the structure only. External stability, including foundation (bearing capacity and settlement) and global stability (including sliding and rotation), is the responsibility of the Owner.

ReinforCed eARTH®
SUSTAINABLE TECHNOLOGY
12001 Sunrise Valley Drive, Suite 400, Reston, VA 20191 (703) 547-8797
"REINFORCED EARTH®" IS A REGISTERED TRADEMARK OF THE REINFORCED EARTH COMPANY.

DESIGNED	DRAWN	REVIEWED	DATE:
CAA	KC	ND	09/06/2019
CHECKED	REVISED	STRUCTURE FILE NUMBER:	
CAA		96833	

SHOP DRAWINGS REBARS PLACEMENT
CUY-IR490/SR10-2.09/19.28
CUYAHOGA COUNTY

CUY-IR490
SR10-2.09/19.28

RE-18631

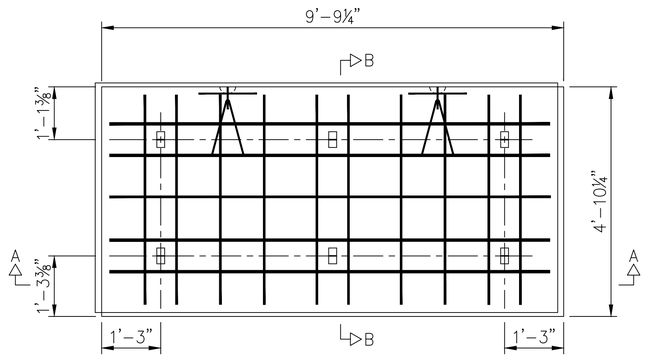

A-6

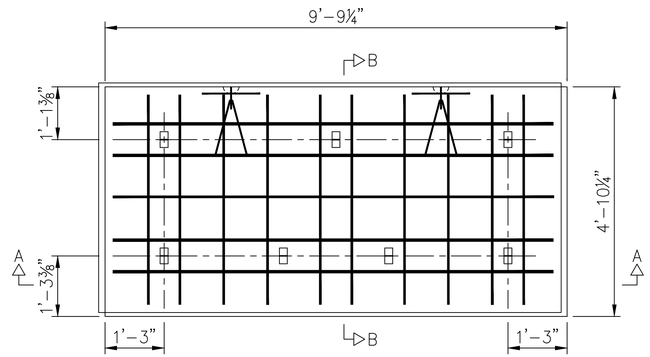

A-7

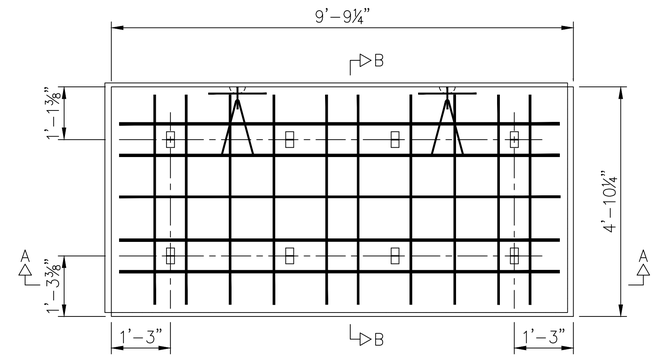

A-8

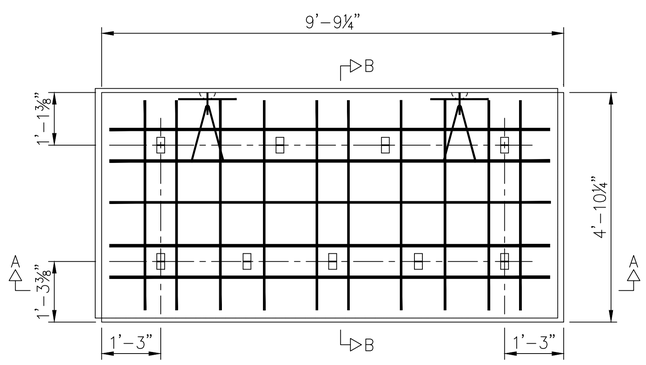

A-9

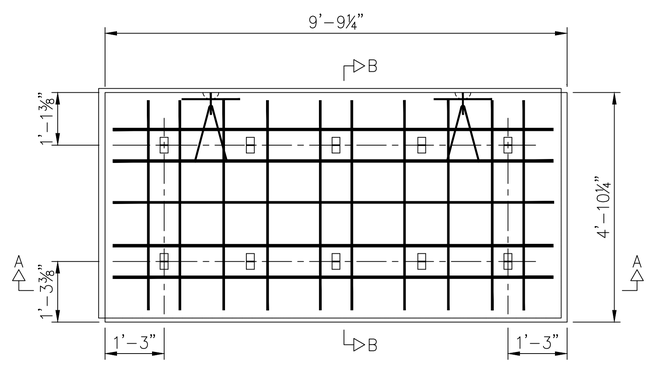

A-10

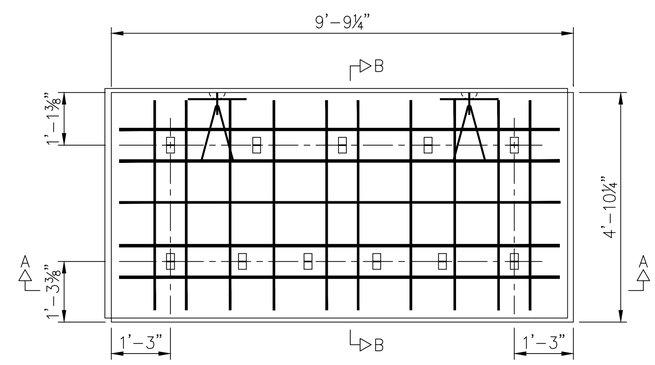

A-11

NOTE:
SEE SECTIONS AND DETAILS ON SHEETS 2, 3, AND 4.

NO.	DATE	REVISION DESCRIPTION

This drawing contains information proprietary to The Reinforced Earth Company, and is being furnished for the use of The Ohio Department of Transportation only in connection with this project, and the information contained is not to be transmitted to any other organization unless specifically authorized in writing by The Reinforced Earth Company. The Reinforced Earth Company is the exclusive licensee in the United States under patents held by our affiliated companies, and the furnishing of this drawing does not constitute an expressed or implied license under any applicable patents.

The design contained on these drawings is based on information provided by the Owner. On the basis of this information, The Reinforced Earth Company has designed, and is responsible for the internal stability of the structure only. External stability, including foundation (bearing capacity and settlement) and global stability (including sliding and rotation), is the responsibility of the Owner.

REINFORCED EARTH®
SUSTAINABLE TECHNOLOGY
12001 Sunrise Valley Drive, Suite 400, Reston, VA 20191 (703) 547-8797
"REINFORCED EARTH®" IS A REGISTERED TRADEMARK OF THE REINFORCED EARTH COMPANY.

DESIGNED	DRAWN	REVIEWED	DATE:
CAA	KC	MA	09/06/2019
CHECKED	REVISED	STRUCTURE FILE NUMBER:	
MA		96833	

PRECAST PANEL SHOP DRAWINGS
CUY-IR490/SR10-2.09/19.28
CUYAHOGA COUNTY

CUY-IR490
SR10-2.09/19.28

RE-18631

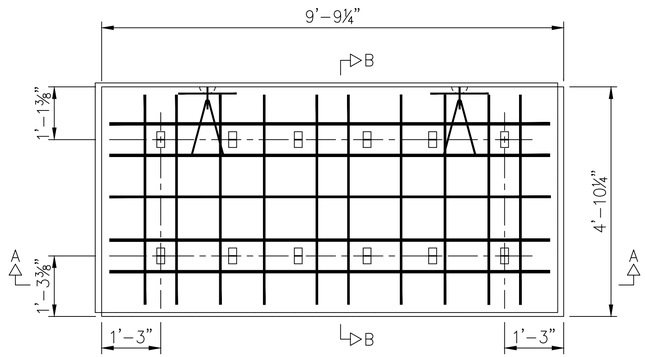

A-12

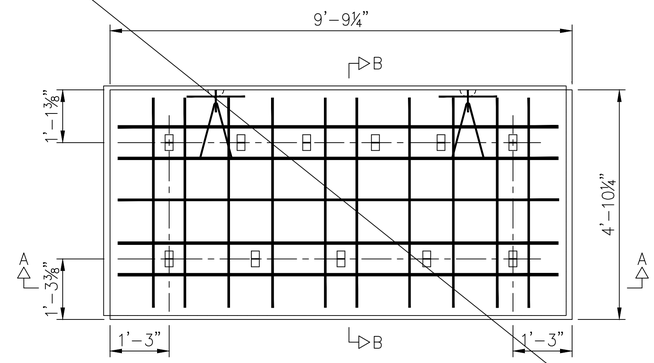

AA1T-11
1

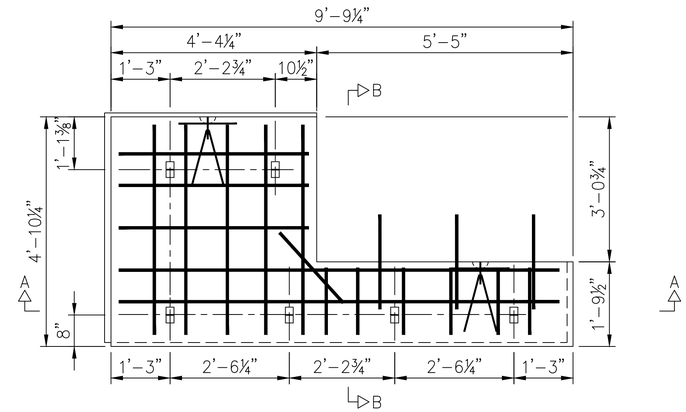

AA2Q-6-D

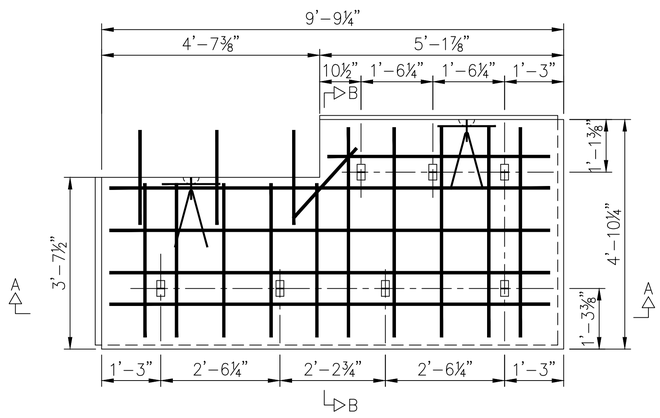

AA3Q-7-D

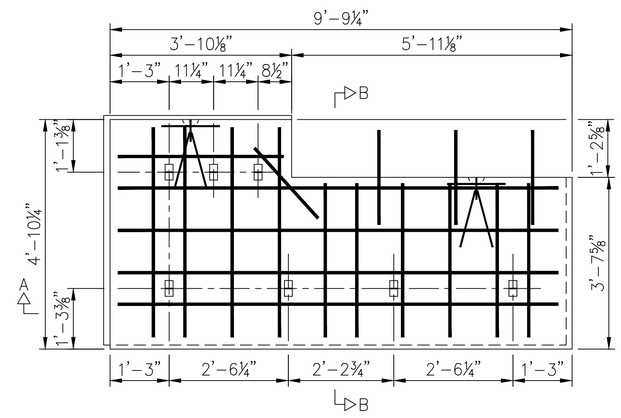

AA4Q-7-D

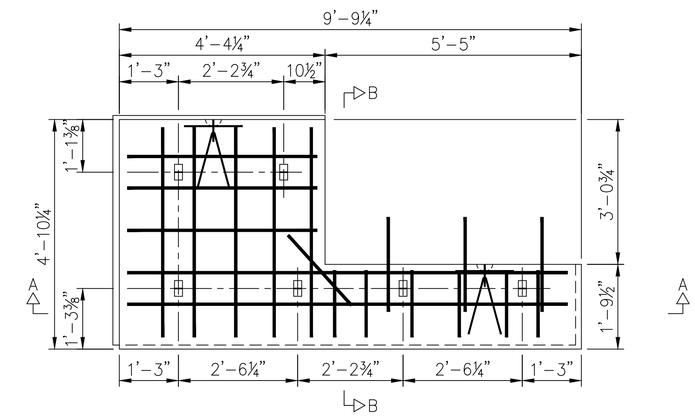

AA5Q-6-D

NOTE:
SEE SECTIONS AND DETAILS ON SHEETS 2, 3, AND 4.

NO.	DATE	REVISION DESCRIPTION
1	9/24/19	REVISED PER E.L. ROBINSON COMMENT

This drawing contains information proprietary to The Reinforced Earth Company, and is being furnished for the use of The Ohio Department of Transportation only in connection with this project, and the information contained is not to be transmitted to any other organization unless specifically authorized in writing by The Reinforced Earth Company. The Reinforced Earth Company is the exclusive licensee in the United States under patents held by our affiliated companies, and the furnishing of this drawing does not constitute an expressed or implied license under any applicable patents.

The design contained on these drawings is based on information provided by the Owner. On the basis of this information, The Reinforced Earth Company has designed, and is responsible for the internal stability of the structure only. External stability, including foundation (bearing capacity and settlement) and global stability (including sliding and rotation), is the responsibility of the Owner.

REINFORCED EARTH®
SUSTAINABLE TECHNOLOGY
12001 Sunrise Valley Drive, Suite 400, Reston, VA 20191 (703) 547-8797
"REINFORCED EARTH®" IS A REGISTERED TRADEMARK OF THE REINFORCED EARTH COMPANY.

DESIGNED	DRAWN	REVIEWED	DATE:
CAA	KC	MA	09/06/2019
CHECKED	REVISED	STRUCTURE FILE NUMBER:	
MA		96833	

PRECAST PANEL SHOP DRAWINGS
CUY-IR490/SR10-2.09/19.28
CUYAHOGA COUNTY

CUY-IR490
SR10-2.09/19.28

RE-18631

NOTE:
THIS PANEL HAS CUT ON
BOTH LEFT AND RIGHT EDGES

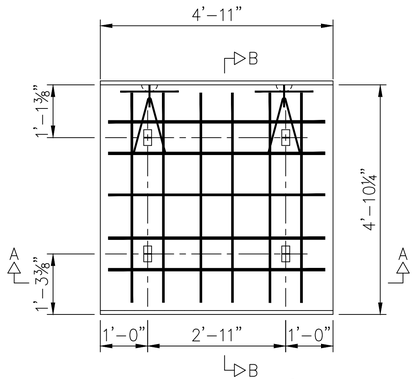

AAD-4-4.92'

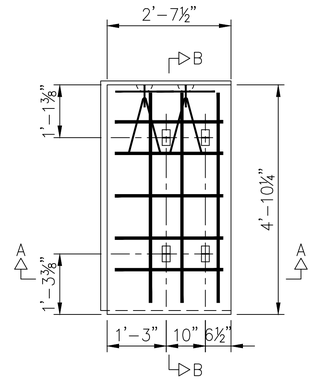

AAL-4-2.78'

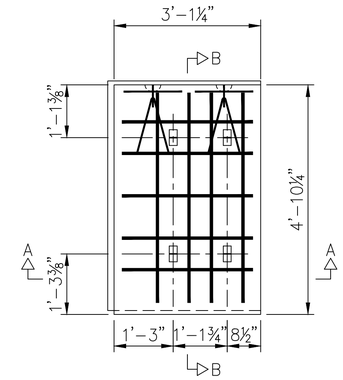

AAL-4-3.26'

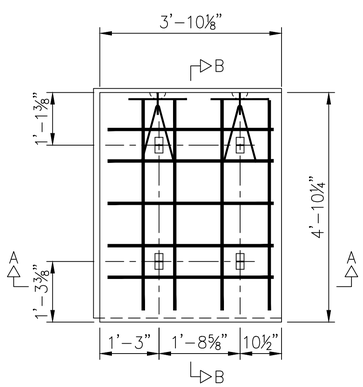

AAL-4-4.00'

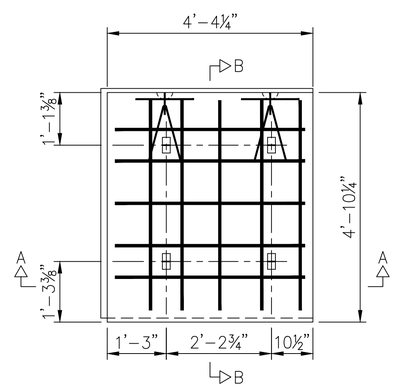

AAL-4-4.51'

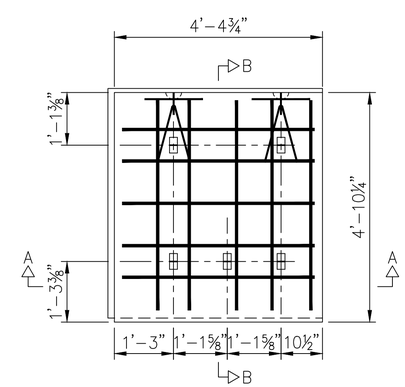

AAL-5-4.56'

NOTE:
SEE SECTIONS AND DETAILS ON SHEETS 2, 3, AND 4.

NO.	DATE	REVISION DESCRIPTION

This drawing contains information proprietary to The Reinforced Earth Company, and is being furnished for the use of The Ohio Department of Transportation only in connection with this project, and the information contained is not to be transmitted to any other organization unless specifically authorized in writing by The Reinforced Earth Company. The Reinforced Earth Company is the exclusive licensee in the United States under patents held by our affiliated companies, and the furnishing of this drawing does not constitute an expressed or implied license under any applicable patents.

The design contained on these drawings is based on information provided by the Owner. On the basis of this information, The Reinforced Earth Company has designed, and is responsible for the internal stability of the structure only. External stability, including foundation (bearing capacity and settlement) and global stability (including sliding and rotation), is the responsibility of the Owner.

REINFORCED EARTH®
SUSTAINABLE TECHNOLOGY
12001 Sunrise Valley Drive, Suite 400, Reston, VA 20191 (703) 547-8797
"REINFORCED EARTH®" IS A REGISTERED TRADEMARK OF THE REINFORCED EARTH COMPANY.

DESIGNED	DRAWN	REVIEWED	DATE:
CAA	KC	MA	09/06/2019
CHECKED	REVISED	PSTRUCTURE FILE NUMBER:	
MA		96833	

PRECAST PANEL SHOP DRAWINGS
CUY-IR490/SR10-2.09/19.28
CUYAHOGA COUNTY

CUY-IR490
SR10-2.09/19.28

RE-18631

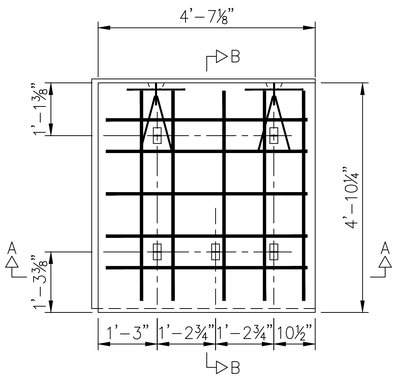

AAL-5-4.75'

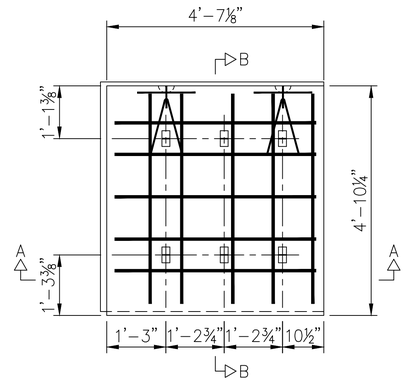

AAL-6-4.75'

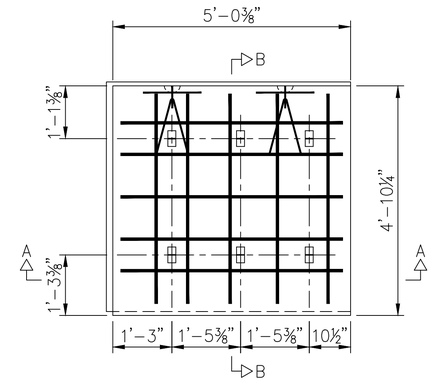

AAL-6-5.19'

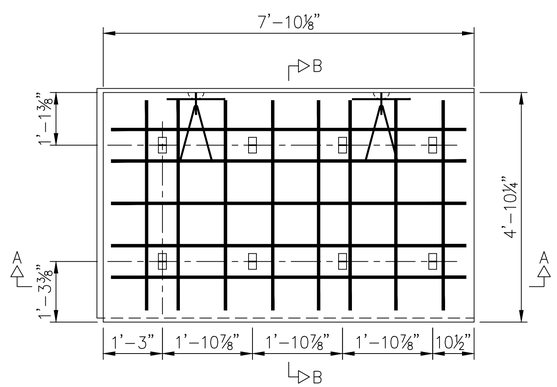

AAL-8-8.00'

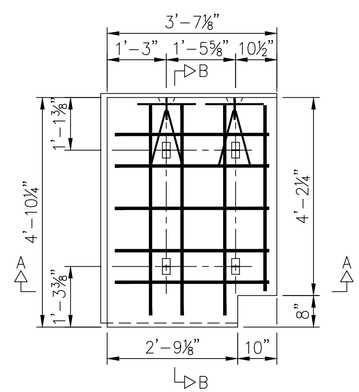

AALQ-4-3.75'

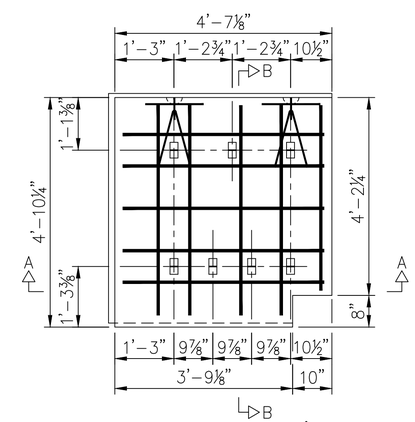

AALQ-7-4.75'

NOTE:
SEE SECTIONS AND DETAILS ON SHEETS 2, 3, AND 4.

NO.	DATE	REVISION DESCRIPTION

This drawing contains information proprietary to The Reinforced Earth Company, and is being furnished for the use of The Ohio Department of Transportation only in connection with this project, and the information contained is not to be transmitted to any other organization unless specifically authorized in writing by The Reinforced Earth Company. The Reinforced Earth Company is the exclusive licensee in the United States under patents held by our affiliated companies, and the furnishing of this drawing does not constitute an expressed or implied license under any applicable patents.

The design contained on these drawings is based on information provided by the Owner. On the basis of this information, The Reinforced Earth Company has designed, and is responsible for the internal stability of the structure only. External stability, including foundation (bearing capacity and settlement) and global stability (including sliding and rotation), is the responsibility of the Owner.

REINFORCED EARTH®
SUSTAINABLE TECHNOLOGY
12001 Sunrise Valley Drive, Suite 400, Reston, VA 20191 (703) 547-8797
"REINFORCED EARTH®" IS A REGISTERED TRADEMARK OF THE REINFORCED EARTH COMPANY.

DESIGNED	DRAWN	REVIEWED	DATE:
CAA	KC	MA	09/06/2019
CHECKED	REVISED	PSTRUCTURE FILE NUMBER:	
MA		96833	

PRECAST PANEL SHOP DRAWINGS
CUY-IR490/SR10-2.09/19.28
CUYAHOGA COUNTY

CUY-IR490
SR10-2.09/19.28

RE-18631

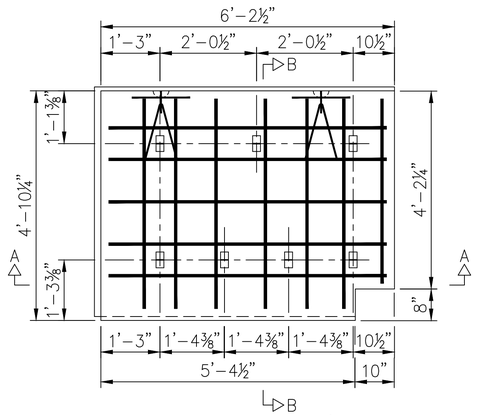

AALQ-7-6.37'

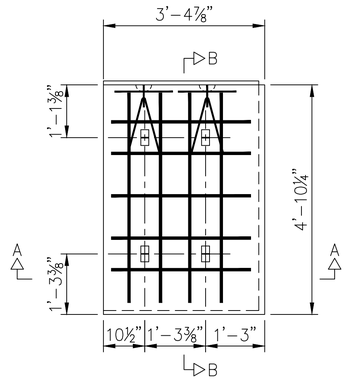

AAR-4-3.32'

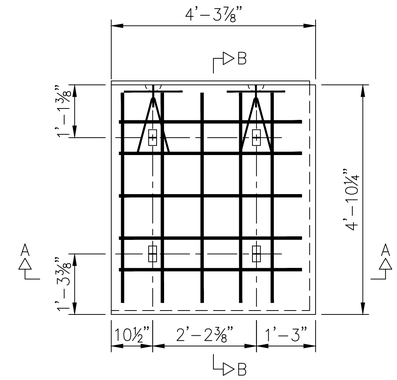

AAR-4-4.23'

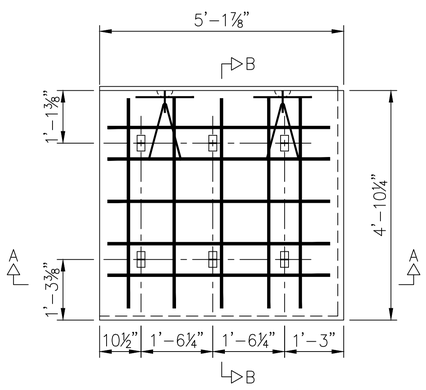

AAR-6-5.07'

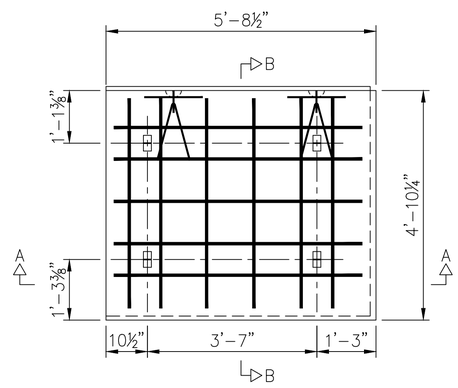

AAR-4-5.62'

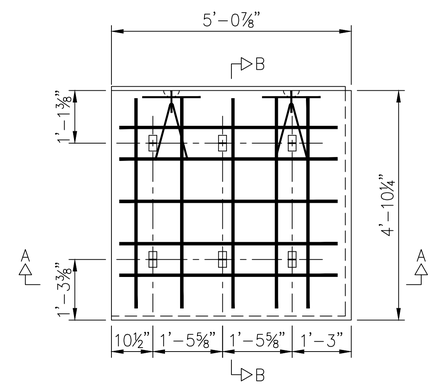

AAR-6-4.98'

NOTE:
SEE SECTIONS AND DETAILS ON SHEETS 2, 3, AND 4.

NO.	DATE	REVISION DESCRIPTION

This drawing contains information proprietary to The Reinforced Earth Company, and is being furnished for the use of The Ohio Department of Transportation only in connection with this project, and the information contained is not to be transmitted to any other organization unless specifically authorized in writing by The Reinforced Earth Company. The Reinforced Earth Company is the exclusive licensee in the United States under patents held by our affiliated companies, and the furnishing of this drawing does not constitute an expressed or implied license under any applicable patents.

The design contained on these drawings is based on information provided by the Owner. On the basis of this information, The Reinforced Earth Company has designed, and is responsible for the internal stability of the structure only. External stability, including foundation (bearing capacity and settlement) and global stability (including sliding and rotation), is the responsibility of the Owner.

REINFORCED EARTH®
SUSTAINABLE TECHNOLOGY
12001 Sunrise Valley Drive, Suite 400, Reston, VA 20191 (703) 547-8797
"REINFORCED EARTH®" IS A REGISTERED TRADEMARK OF THE REINFORCED EARTH COMPANY.

DESIGNED	DRAWN	REVIEWED	DATE:
CAA	KC	MA	09/06/2019
CHECKED	REVISED	STRUCTURE FILE NUMBER:	
MA		96833	

PRECAST PANEL SHOP DRAWINGS
CUY-IR490/SR10-2.09/19.28
CUYAHOGA COUNTY

CUY-IR490
SR10-2.09/19.28

RE-18631

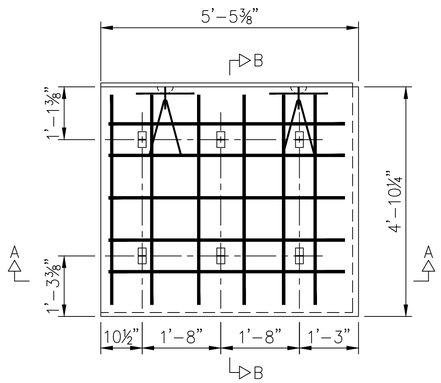

AAR-6-5.36'

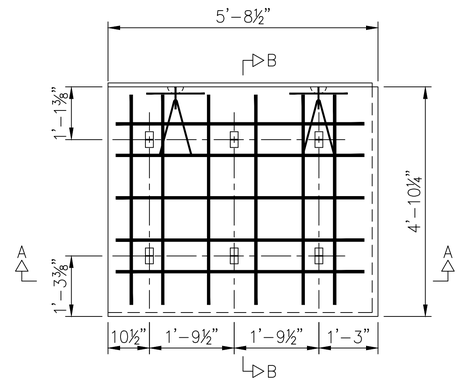

AAR-6-5.62'

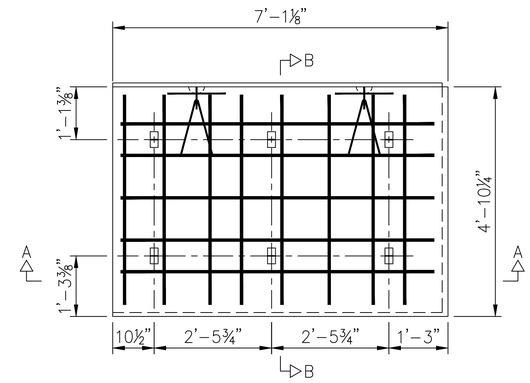

AAR-6-7.00'

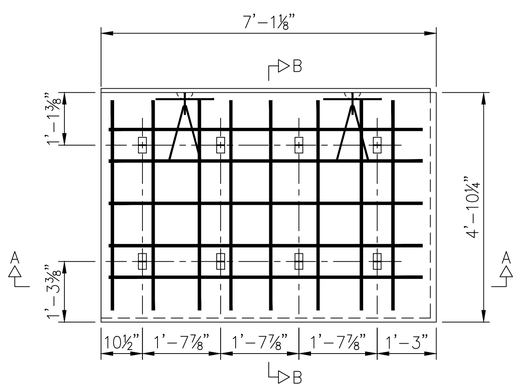

AAR-8-7.00'

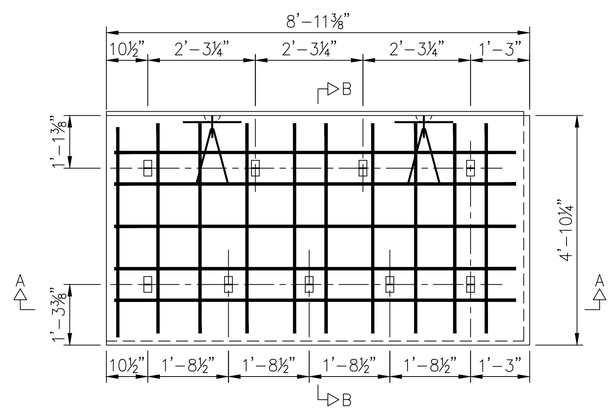

AAR-9-8.86'

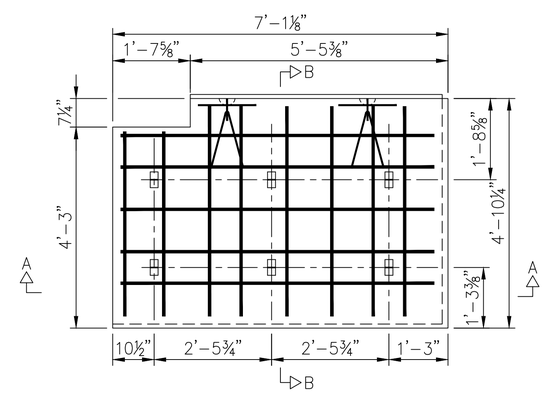

AAR1Q-6-7.00'

NOTE:
SEE SECTIONS AND DETAILS ON SHEETS 2, 3, AND 4.

NO.	DATE	REVISION DESCRIPTION

This drawing contains information proprietary to The Reinforced Earth Company, and is being furnished for the use of The Ohio Department of Transportation only in connection with this project, and the information contained is not to be transmitted to any other organization unless specifically authorized in writing by The Reinforced Earth Company. The Reinforced Earth Company is the exclusive licensee in the United States under patents held by our affiliated companies, and the furnishing of this drawing does not constitute an expressed or implied license under any applicable patents.

The design contained on these drawings is based on information provided by the Owner. On the basis of this information, The Reinforced Earth Company has designed, and is responsible for the internal stability of the structure only. External stability, including foundation (bearing capacity and settlement) and global stability (including sliding and rotation), is the responsibility of the Owner.

REINFORCED EARTH®
SUSTAINABLE TECHNOLOGY
12001 Sunrise Valley Drive, Suite 400, Reston, VA 20191 (703) 547-8797
"REINFORCED EARTH®" IS A REGISTERED TRADEMARK OF THE REINFORCED EARTH COMPANY.

DESIGNED	DRAWN	REVIEWED	DATE:
CAA	KC	MA	09/06/2019
CHECKED	REVISED	STRUCTURE FILE NUMBER:	
MA		96833	

PRECAST PANEL SHOP DRAWINGS
CUY-IR490/SR10-2.09/19.28
CUYAHOGA COUNTY

CUY-IR490
SR10-2.09/19.28

RE-18631

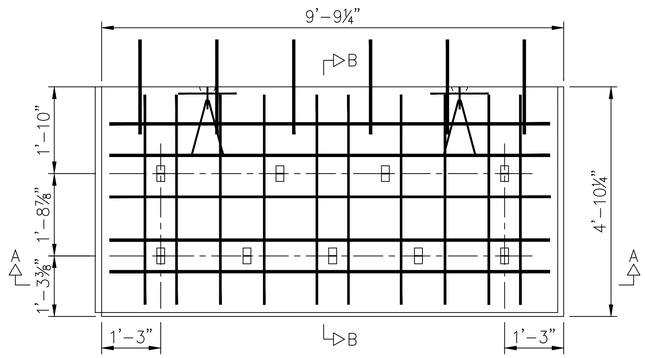

AAT-9-D

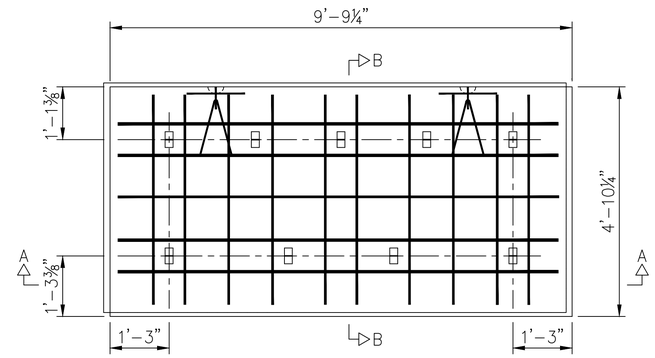

AA1T-9

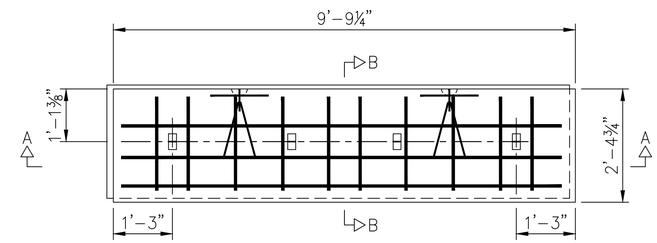

B-4

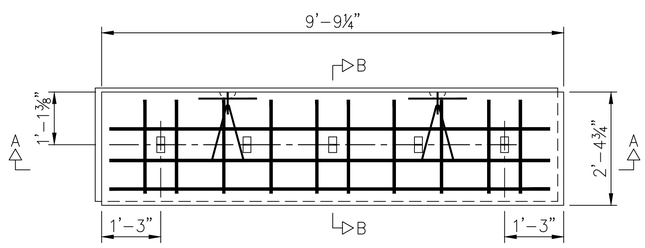

B-5

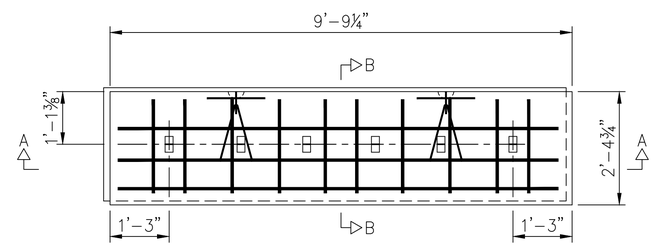

B-6

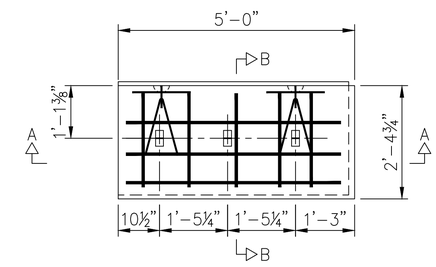

BBR-3-4.91'

NOTE:
SEE SECTIONS AND DETAILS ON SHEETS 2, 3, AND 4.

NO.	DATE	REVISION DESCRIPTION

This drawing contains information proprietary to The Reinforced Earth Company, and is being furnished for the use of The Ohio Department of Transportation only in connection with this project, and the information contained is not to be transmitted to any other organization unless specifically authorized in writing by The Reinforced Earth Company. The Reinforced Earth Company is the exclusive licensee in the United States under patents held by our affiliated companies, and the furnishing of this drawing does not constitute an expressed or implied license under any applicable patents.

The design contained on these drawings is based on information provided by the Owner. On the basis of this information, The Reinforced Earth Company has designed, and is responsible for the internal stability of the structure only. External stability, including foundation (bearing capacity and settlement) and global stability (including sliding and rotation), is the responsibility of the Owner.

REINFORCED EARTH®
SUSTAINABLE TECHNOLOGY
12001 Sunrise Valley Drive, Suite 400, Reston, VA 20191 (703) 547-8797
"REINFORCED EARTH®" IS A REGISTERED TRADEMARK OF THE REINFORCED EARTH COMPANY.

DESIGNED	DRAWN	REVIEWED	DATE:
CAA	KC	MA	09/06/2019
CHECKED	REVISED	STRUCTURE FILE NUMBER:	
MA		96833	

PRECAST PANEL SHOP DRAWINGS
CUY-IR490/SR10-2.09/19.28
CUYAHOGA COUNTY

CUY-IR490
SR10-2.09/19.28

RE-18631

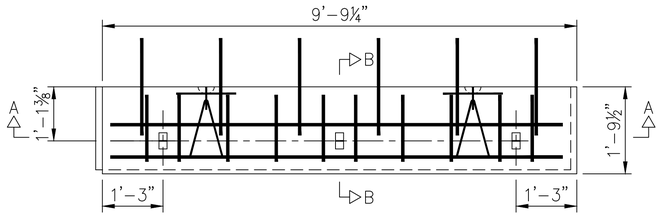

C-3-D

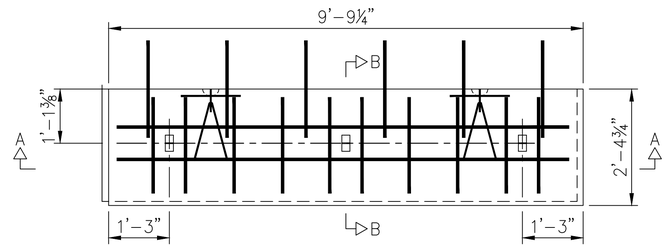

D-3-D

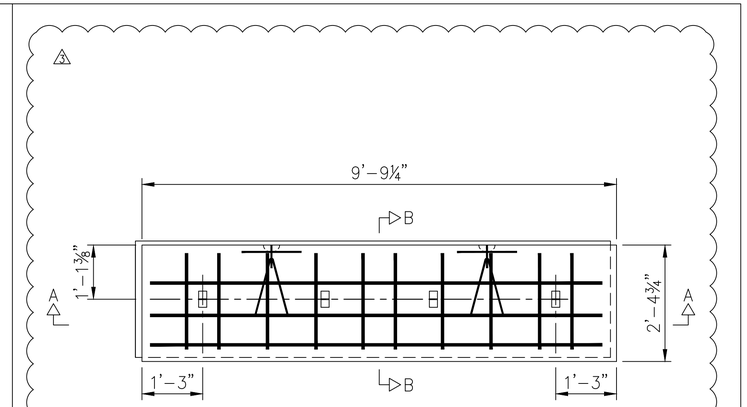

B-4

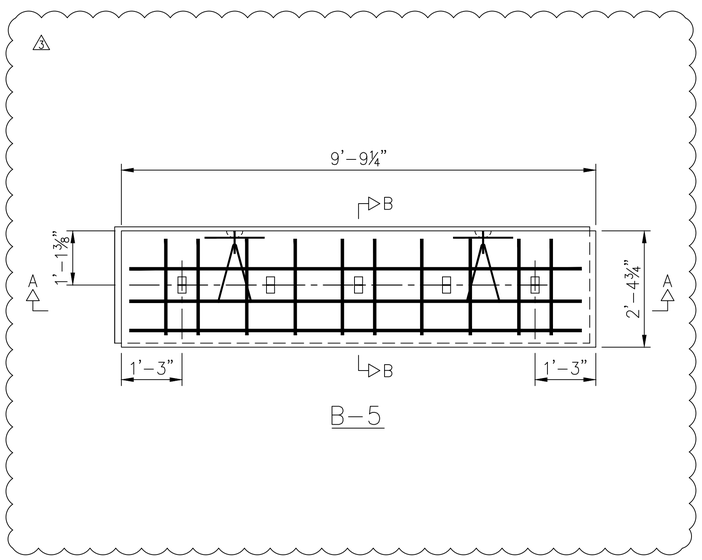

B-5

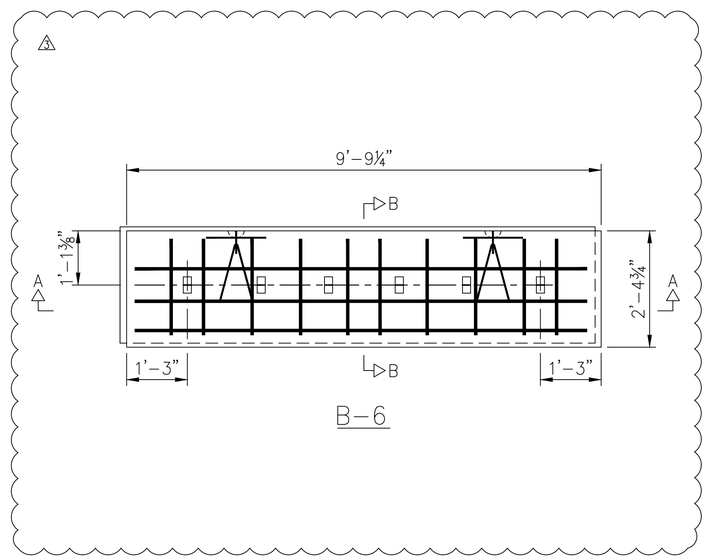

B-6

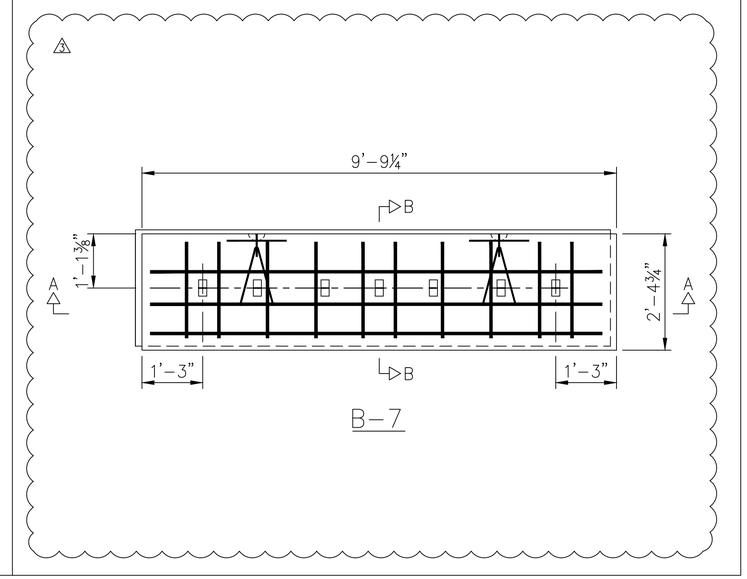

B-7

NOTE:
SEE SECTIONS AND DETAILS ON SHEETS 2, 3, AND 4.

NO.	DATE	REVISION DESCRIPTION
5	10/28/19	MISCELLANEOUS CLARIFICATIONS

This drawing contains information proprietary to The Reinforced Earth Company, and is being furnished for the use of The Ohio Department of Transportation only in connection with this project, and the information contained is not to be transmitted to any other organization unless specifically authorized in writing by The Reinforced Earth Company. The Reinforced Earth Company is the exclusive licensee in the United States under patents held by our affiliated companies, and the furnishing of this drawing does not constitute an expressed or implied license under any applicable patents.

The design contained on these drawings is based on information provided by the Owner. On the basis of this information, The Reinforced Earth Company has designed, and is responsible for the internal stability of the structure only. External stability, including foundation (bearing capacity and settlement) and global stability (including sliding and rotation), is the responsibility of the Owner.

REINFORCED EARTH®
SUSTAINABLE TECHNOLOGY
12001 Sunrise Valley Drive, Suite 400, Reston, VA 20191 (703) 547-8797
"REINFORCED EARTH®" IS A REGISTERED TRADEMARK OF THE REINFORCED EARTH COMPANY.

DESIGNED	DRAWN	REVIEWED	DATE:
CAA	KC	MA	09/06/2019
CHECKED	REVISED	STRUCTURE FILE	NUMBER:
MA			96833

PRECAST PANEL SHOP DRAWINGS
CUY-IR490/SR10-2.09/19.28
CUYAHOGA COUNTY

CUY-IR490
SR10-2.09/19.28

RE-18631

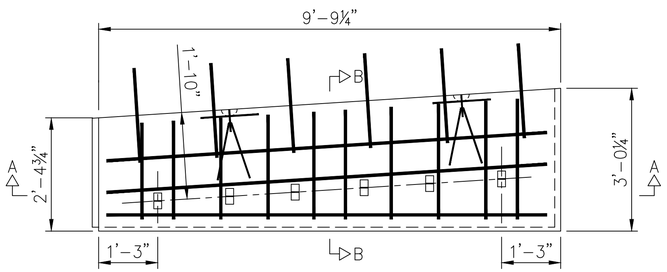

EDT-6-D

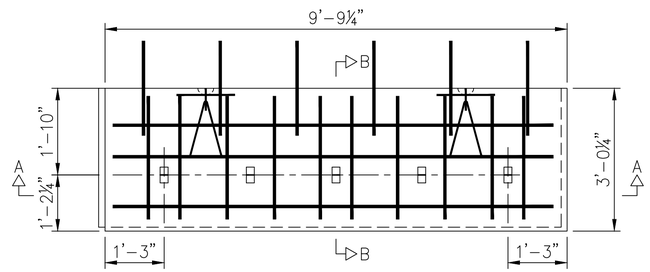

EET-5-D

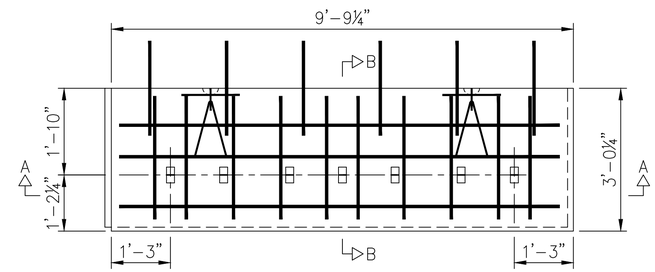

EET-7-D

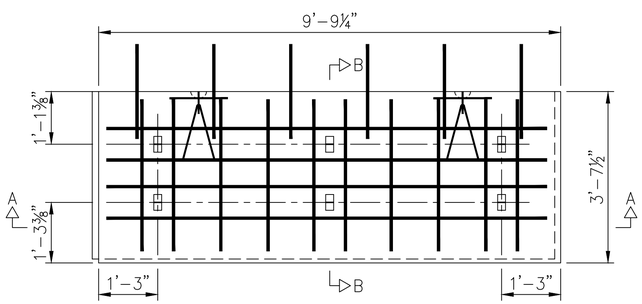

F-6-D

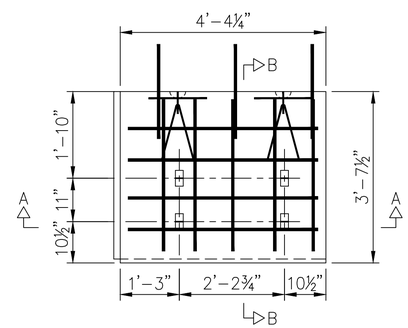

FFLT-4-4.51'-D

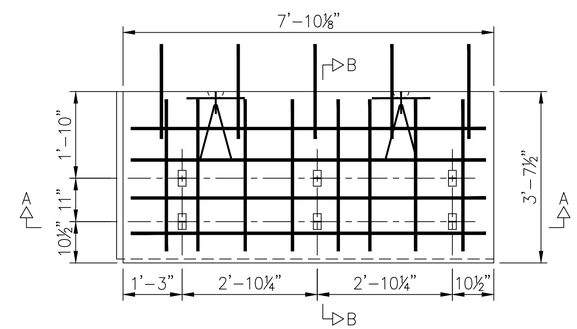

FFLT-6-8.00'-D

NOTE:
SEE SECTIONS AND DETAILS ON SHEETS 2, 3, AND 4.

NO.	DATE	REVISION DESCRIPTION

This drawing contains information proprietary to The Reinforced Earth Company, and is being furnished for the use of The Ohio Department of Transportation only in connection with this project, and the information contained is not to be transmitted to any other organization unless specifically authorized in writing by The Reinforced Earth Company. The Reinforced Earth Company is the exclusive licensee in the United States under patents held by our affiliated companies, and the furnishing of this drawing does not constitute an expressed or implied license under any applicable patents.

The design contained on these drawings is based on information provided by the Owner. On the basis of this information, The Reinforced Earth Company has designed, and is responsible for the internal stability of the structure only. External stability, including foundation (bearing capacity and settlement) and global stability (including sliding and rotation), is the responsibility of the Owner.

REINFORCED EARTH®
SUSTAINABLE TECHNOLOGY
12001 Sunrise Valley Drive, Suite 400, Reston, VA 20191 (703) 547-8797
"REINFORCED EARTH®" IS A REGISTERED TRADEMARK OF THE REINFORCED EARTH COMPANY.

DESIGNED	DRAWN	REVIEWED	DATE:
CAA	KC	MA	09/06/2019
CHECKED	REVISED	STRUCTURE FILE NUMBER:	
MA		96833	

PRECAST PANEL SHOP DRAWINGS
CUY-IR490/SR10-2.09/19.28
CUYAHOGA COUNTY

CUY-IR490
SR10-2.09/19.28

RE-18631

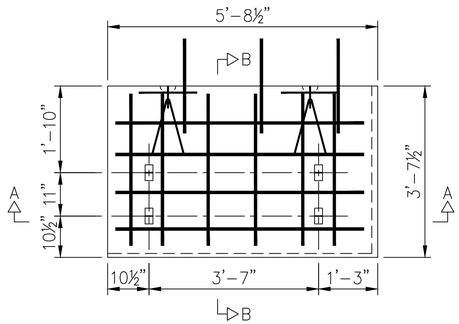

FFRT-4-5.62'-D

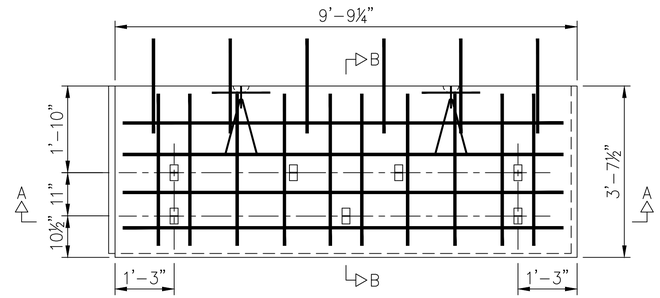

FFT-7-D

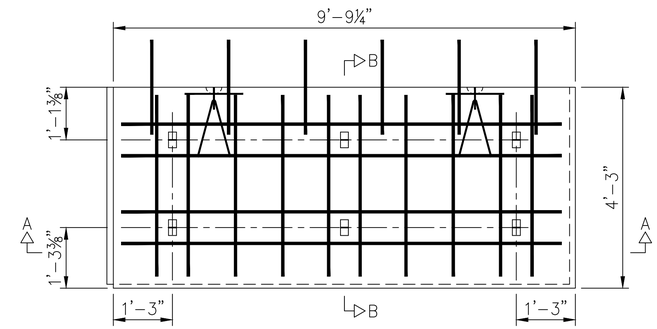

G-6-D

NOTE:
THIS PANEL HAS CUT ON
BOTH LEFT AND RIGHT EDGES

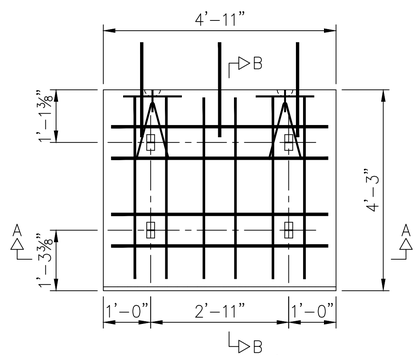

GGD-4-4.92'-D

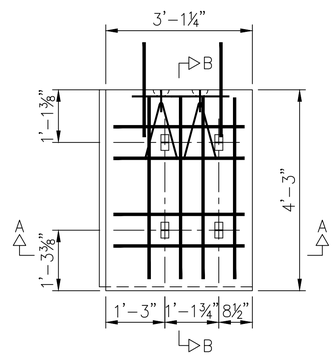

GGL-4-3.26'-D

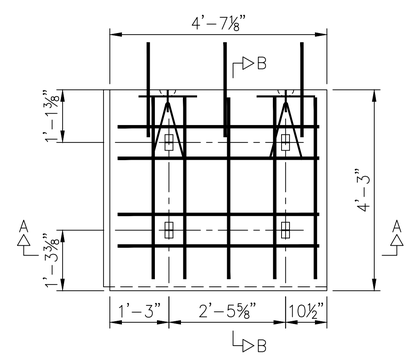

GGL-4-4.75'-D

NOTE:
SEE SECTIONS AND DETAILS ON SHEETS 2, 3, AND 4.

NO.	DATE	REVISION DESCRIPTION

This drawing contains information proprietary to The Reinforced Earth Company, and is being furnished for the use of The Ohio Department of Transportation only in connection with this project, and the information contained is not to be transmitted to any other organization unless specifically authorized in writing by The Reinforced Earth Company. The Reinforced Earth Company is the exclusive licensee in the United States under patents held by our affiliated companies, and the furnishing of this drawing does not constitute an expressed or implied license under any applicable patents.

The design contained on these drawings is based on information provided by the Owner. On the basis of this information, The Reinforced Earth Company has designed, and is responsible for the internal stability of the structure only. External stability, including foundation (bearing capacity and settlement) and global stability (including sliding and rotation), is the responsibility of the Owner.

REINFORCED EARTH®
SUSTAINABLE TECHNOLOGY
12001 Sunrise Valley Drive, Suite 400, Reston, VA 20191 (703) 547-8797
"REINFORCED EARTH®" IS A REGISTERED TRADEMARK OF THE REINFORCED EARTH COMPANY.

DESIGNED	DRAWN	REVIEWED	DATE:
CAA	KC	MA	09/06/2019
CHECKED	REVISED	STRUCTURE FILE	NUMBER:
MA		PS	96833

PRECAST PANEL SHOP DRAWINGS
CUY-IR490/SR10-2.09/19.28
CUYAHOGA COUNTY

CUY-IR490
SR10-2.09/19.28

RE-18631

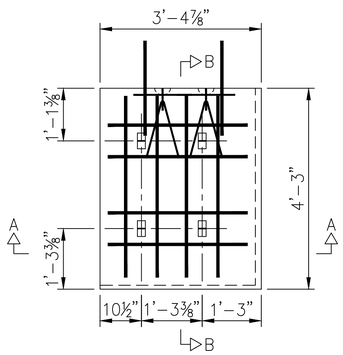

GGR-4-3.32'-D

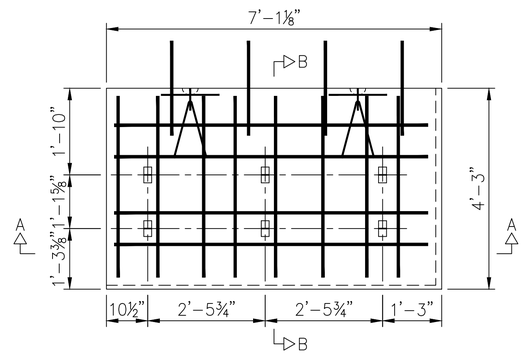

GGRT-6-7.00'-D

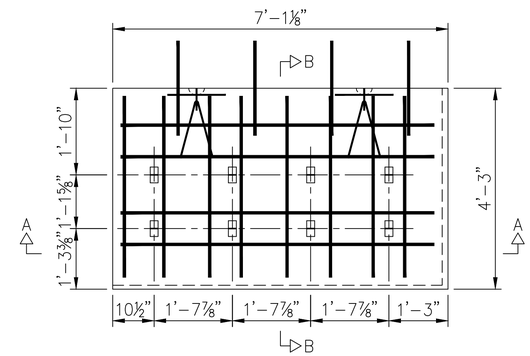

GGRT-8-7.00'-D

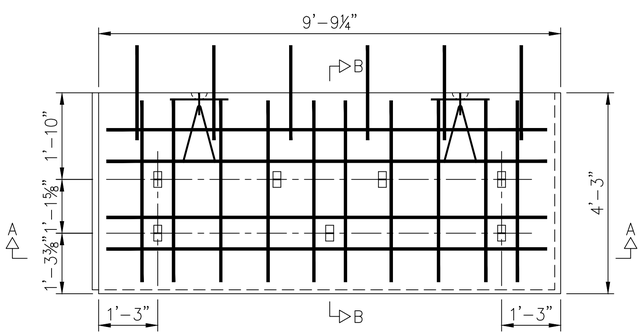

GGT-7-D

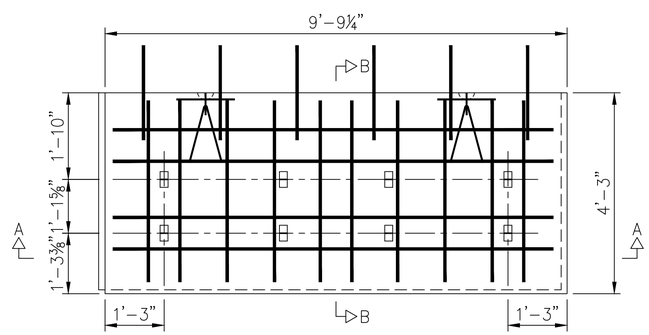

GGT-8-D

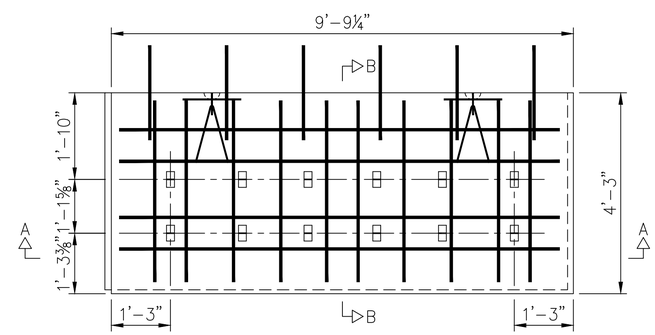

GGT-12-D

NOTE:
SEE SECTIONS AND DETAILS ON SHEETS 2, 3, AND 4.

NO.	DATE	REVISION DESCRIPTION

This drawing contains information proprietary to The Reinforced Earth Company, and is being furnished for the use of The Ohio Department of Transportation only in connection with this project, and the information contained is not to be transmitted to any other organization unless specifically authorized in writing by The Reinforced Earth Company. The Reinforced Earth Company is the exclusive licensee in the United States under patents held by our affiliated companies, and the furnishing of this drawing does not constitute an expressed or implied license under any applicable patents.

The design contained on these drawings is based on information provided by the Owner. On the basis of this information, The Reinforced Earth Company has designed, and is responsible for the internal stability of the structure only. External stability, including foundation (bearing capacity and settlement) and global stability (including sliding and rotation), is the responsibility of the Owner.

REINFORCED EARTH®
SUSTAINABLE TECHNOLOGY
12001 Sunrise Valley Drive, Suite 400, Reston, VA 20191 (703) 547-8797
"REINFORCED EARTH®" IS A REGISTERED TRADEMARK OF THE REINFORCED EARTH COMPANY.

DESIGNED	DRAWN	REVIEWED	DATE:
CAA	KC	MA	09/06/2019
CHECKED	REVISED	STRUCTURE FILE	NUMBER:
MA		96833	

PRECAST PANEL SHOP DRAWINGS
CUY-IR490/SR10-2.09/19.28
CUYAHOGA COUNTY

CUY-IR490
SR10-2.09/19.28

RE-18631

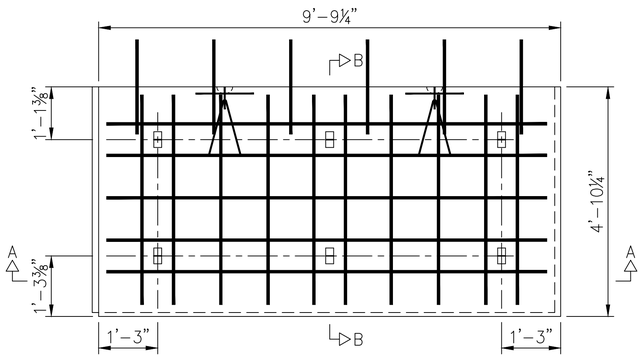

H-6-D

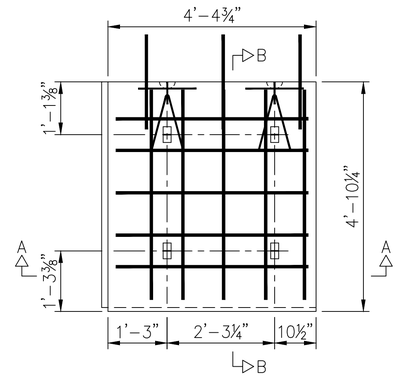

HHL-4-4.56'-D

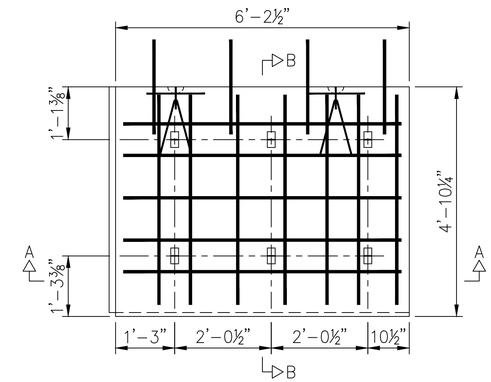

HHL-6-6.37'-D

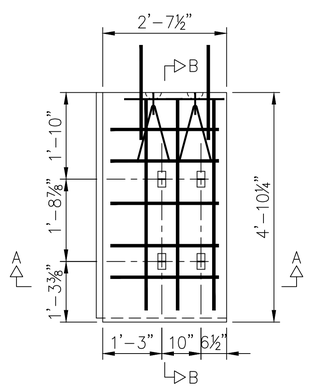

HHLT-4-2.78'-D

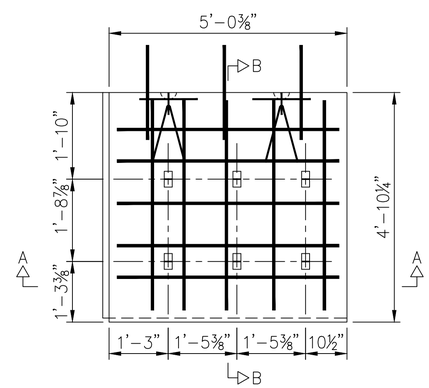

HHLT-6-5.19'-D

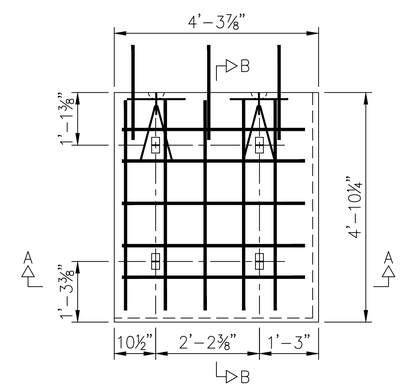

HHR-4-4.23'-D

NOTE:
SEE SECTIONS AND DETAILS ON SHEETS 2, 3, AND 4.

NO.	DATE	REVISION DESCRIPTION

This drawing contains information proprietary to The Reinforced Earth Company, and is being furnished for the use of The Ohio Department of Transportation only in connection with this project, and the information contained is not to be transmitted to any other organization unless specifically authorized in writing by The Reinforced Earth Company. The Reinforced Earth Company is the exclusive licensee in the United States under patents held by our affiliated companies, and the furnishing of this drawing does not constitute an expressed or implied license under any applicable patents.

The design contained on these drawings is based on information provided by the Owner. On the basis of this information, The Reinforced Earth Company has designed, and is responsible for the internal stability of the structure only. External stability, including foundation (bearing capacity and settlement) and global stability (including sliding and rotation), is the responsibility of the Owner.

REINFORCED EARTH®
SUSTAINABLE TECHNOLOGY
12001 Sunrise Valley Drive, Suite 400, Reston, VA 20191 (703) 547-8797
"REINFORCED EARTH®" IS A REGISTERED TRADEMARK OF THE REINFORCED EARTH COMPANY.

DESIGNED	DRAWN	REVIEWED	DATE:
CAA	KC	MA	09/06/2019
CHECKED	REVISED	STRUCTURE FILE NUMBER:	
MA		96833	

PRECAST PANEL SHOP DRAWINGS
CUY-IR490/SR10-2.09/19.28
CUYAHOGA COUNTY

CUY-IR490
SR10-2.09/19.28

RE-18631

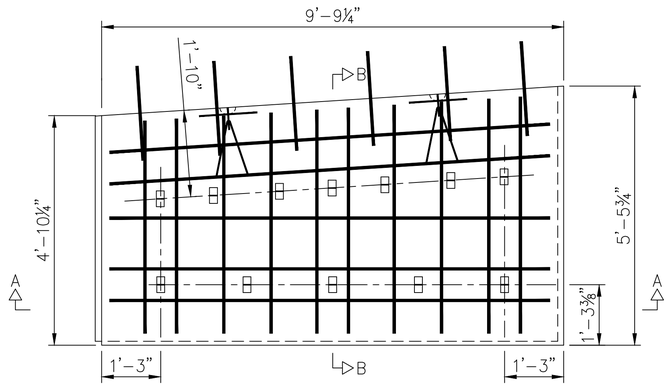

KHT-12-D

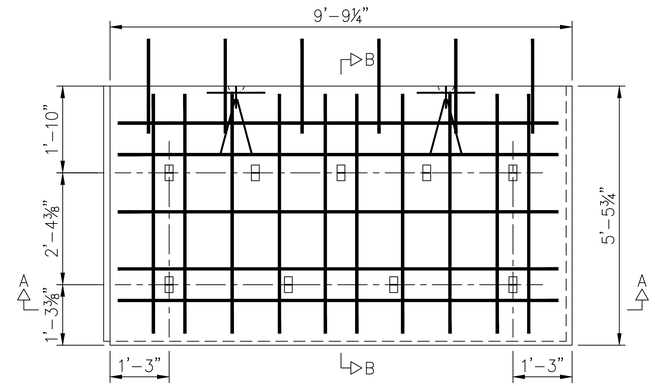

KKT-9-D

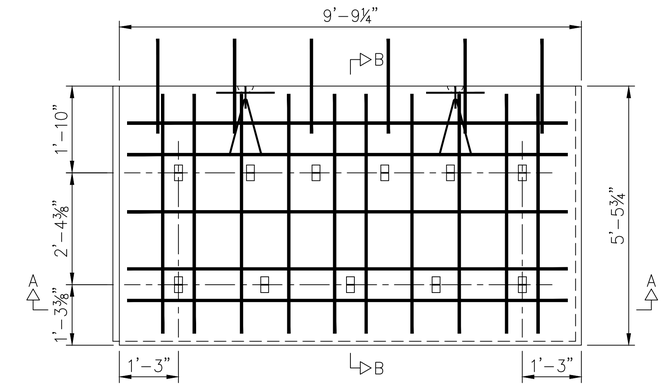

KKT-11-D

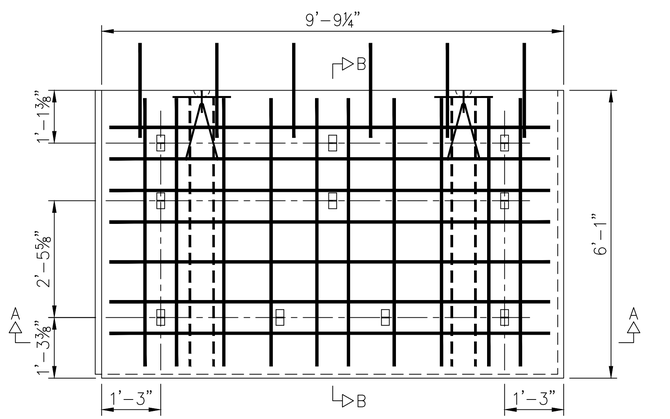

L-10-D

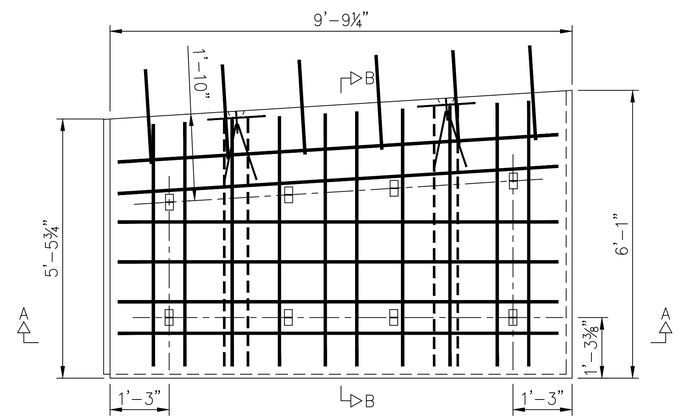

LKT-8-D

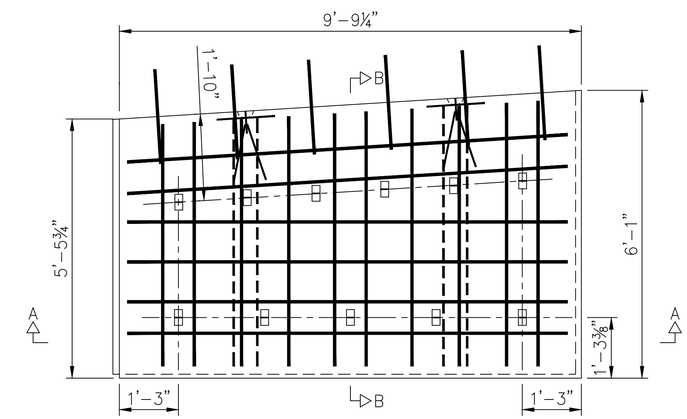

LKT-11-D

NOTE:
SEE SECTIONS AND DETAILS ON SHEETS 2, 3, AND 4.

NO.	DATE	REVISION DESCRIPTION

This drawing contains information proprietary to The Reinforced Earth Company, and is being furnished for the use of The Ohio Department of Transportation only in connection with this project, and the information contained is not to be transmitted to any other organization unless specifically authorized in writing by The Reinforced Earth Company. The Reinforced Earth Company is the exclusive licensee in the United States under patents held by our affiliated companies, and the furnishing of this drawing does not constitute an expressed or implied license under any applicable patents.

The design contained on these drawings is based on information provided by the Owner. On the basis of this information, The Reinforced Earth Company has designed, and is responsible for the internal stability of the structure only. External stability, including foundation (bearing capacity and settlement) and global stability (including sliding and rotation), is the responsibility of the Owner.

REINFORCED EARTH®
SUSTAINABLE TECHNOLOGY
12001 Sunrise Valley Drive, Suite 400, Reston, VA 20191 (703) 547-8797
"REINFORCED EARTH®" IS A REGISTERED TRADEMARK OF THE REINFORCED EARTH COMPANY.

DESIGNED	DRAWN	REVIEWED	DATE:
CAA	KC	MA	09/06/2019
CHECKED	REVISED	PSTRUCTURE FILE NUMBER:	
MA		96833	

PRECAST PANEL SHOP DRAWINGS
CUY-IR490/SR10-2.09/19.28
CUYAHOGA COUNTY

CUY-IR490
SR10-2.09/19.28

RE-18631

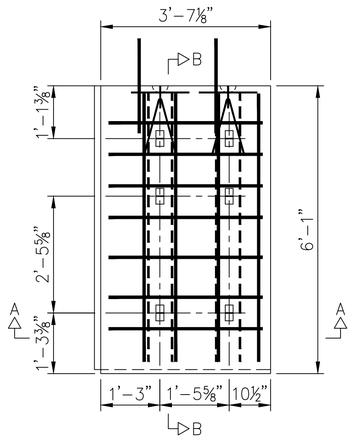

LLL-6-3.75'-D

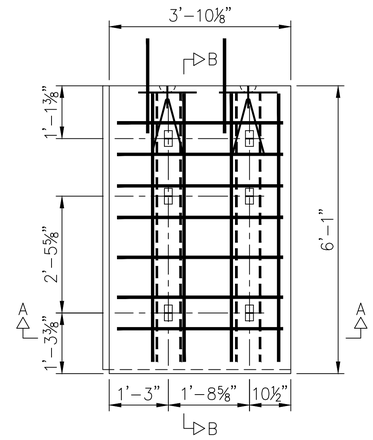

LLL-6-4.00'-D

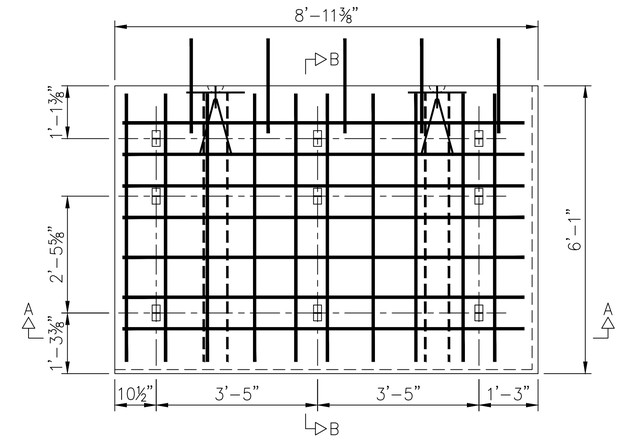

LLR-9-8.86'-D

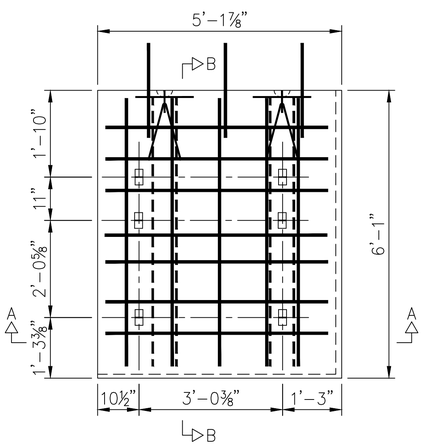

LLRT-6-5.07'-D

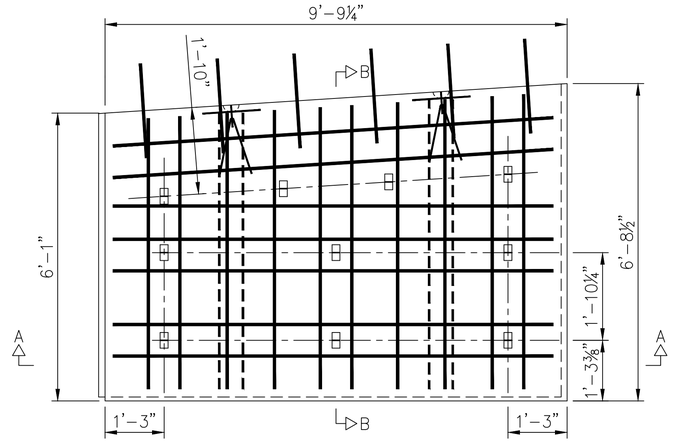

MLT-10-D

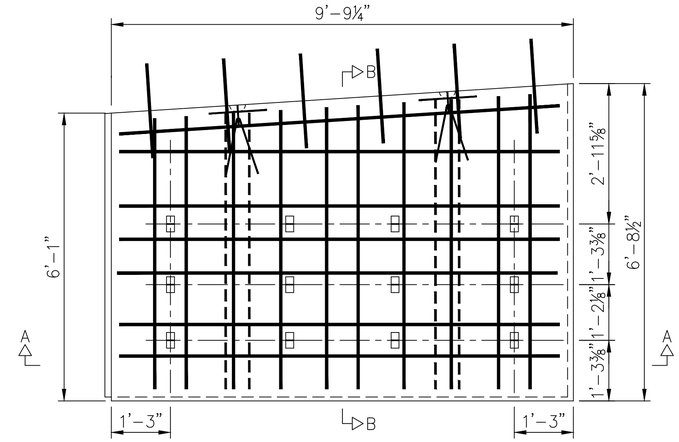

1 MLT-12-D

NOTE:
SEE SECTIONS AND DETAILS ON SHEETS 2, 3, AND 4.

NO.	DATE	REVISION DESCRIPTION
1	9/24/19	REVISED PER E.L. ROBINSON COMMENT

This drawing contains information proprietary to The Reinforced Earth Company, and is being furnished for the use of The Ohio Department of Transportation only in connection with this project, and the information contained is not to be transmitted to any other organization unless specifically authorized in writing by The Reinforced Earth Company. The Reinforced Earth Company is the exclusive licensee in the United States under patents held by our affiliated companies, and the furnishing of this drawing does not constitute an expressed or implied license under any applicable patents.

The design contained on these drawings is based on information provided by the Owner. On the basis of this information, The Reinforced Earth Company has designed, and is responsible for the internal stability of the structure only. External stability, including foundation (bearing capacity and settlement) and global stability (including sliding and rotation), is the responsibility of the Owner.

REINFORCED EARTH®
SUSTAINABLE TECHNOLOGY
12001 Sunrise Valley Drive, Suite 400, Reston, VA 20191 (703) 547-8797
"REINFORCED EARTH®" IS A REGISTERED TRADEMARK OF THE REINFORCED EARTH COMPANY.

DESIGNED	DRAWN	REVIEWED	DATE:
CAA	KC	MA	09/06/2019
CHECKED	REVISED	STRUCTURE FILE NUMBER:	
MA		96833	

PRECAST PANEL SHOP DRAWINGS
CUY-IR490/SR10-2.09/19.28
CUYAHOGA COUNTY

CUY-IR490
SR10-2.09/19.28

RE-18631

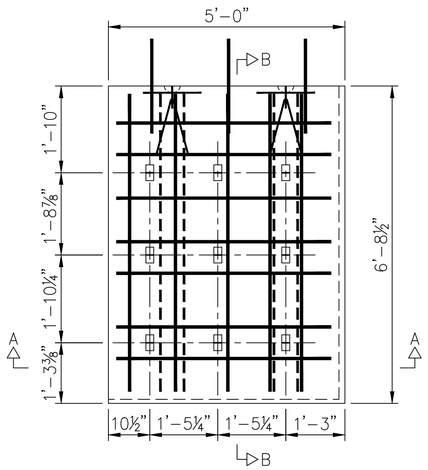

MMRT-9-4.91'-D

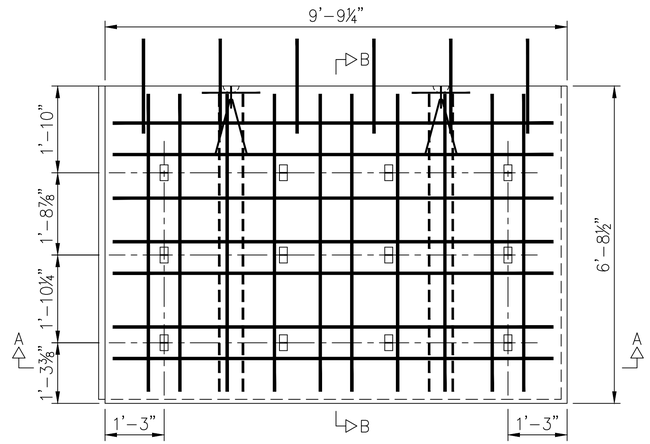

MMT-12-D

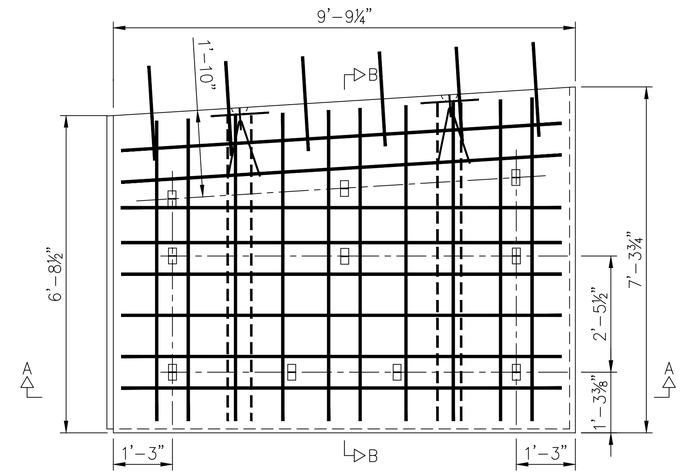

NMT-10-D

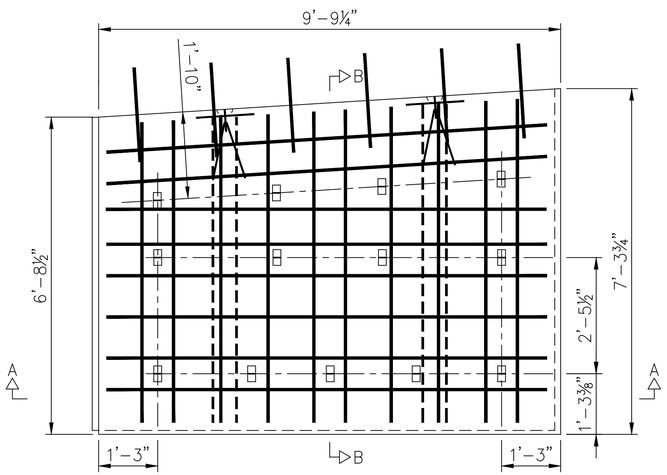

NMT-13-D

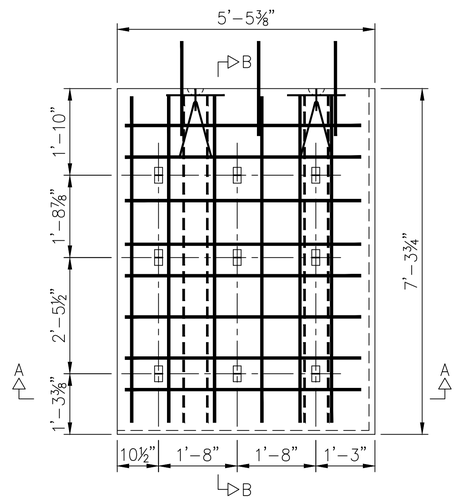

NNRT-9-5.36'-D

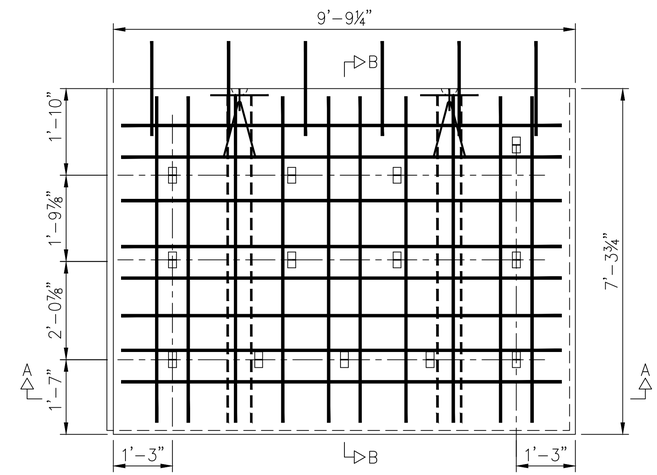

NNT-13-D

NOTE:
SEE SECTIONS AND DETAILS ON SHEETS 2, 3, AND 4.

NO.	DATE	REVISION DESCRIPTION

This drawing contains information proprietary to The Reinforced Earth Company, and is being furnished for the use of The Ohio Department of Transportation only in connection with this project, and the information contained is not to be transmitted to any other organization unless specifically authorized in writing by The Reinforced Earth Company. The Reinforced Earth Company is the exclusive licensee in the United States under patents held by our affiliated companies, and the furnishing of this drawing does not constitute an expressed or implied license under any applicable patents.

The design contained on these drawings is based on information provided by the Owner. On the basis of this information, The Reinforced Earth Company has designed, and is responsible for the internal stability of the structure only. External stability, including foundation (bearing capacity and settlement) and global stability (including sliding and rotation), is the responsibility of the Owner.

REINFORCED EARTH®
SUSTAINABLE TECHNOLOGY
12001 Sunrise Valley Drive, Suite 400, Reston, VA 20191 (703) 547-8797
"REINFORCED EARTH®" IS A REGISTERED TRADEMARK OF THE REINFORCED EARTH COMPANY.

DESIGNED	DRAWN	REVIEWED	DATE:
CAA	KC	MA	09/06/2019
CHECKED	REVISED	STRUCTURE FILE	NUMBER:
MA		96833	

PRECAST PANEL SHOP DRAWINGS
CUY-IR490/SR10-2.09/19.28
CUYAHOGA COUNTY

CUY-IR490
SR10-2.09/19.28

RE-18631

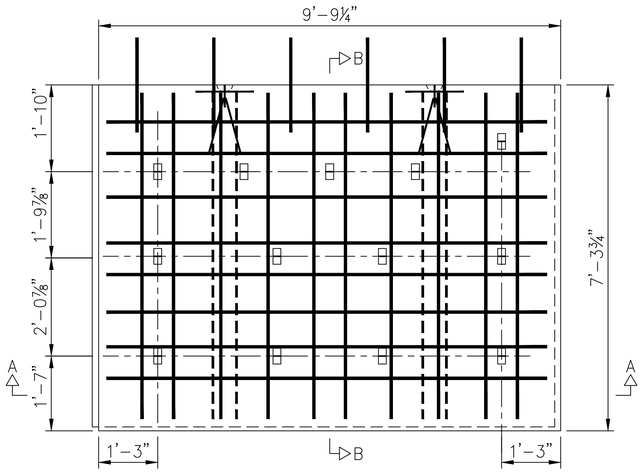

1 NNT-13-D

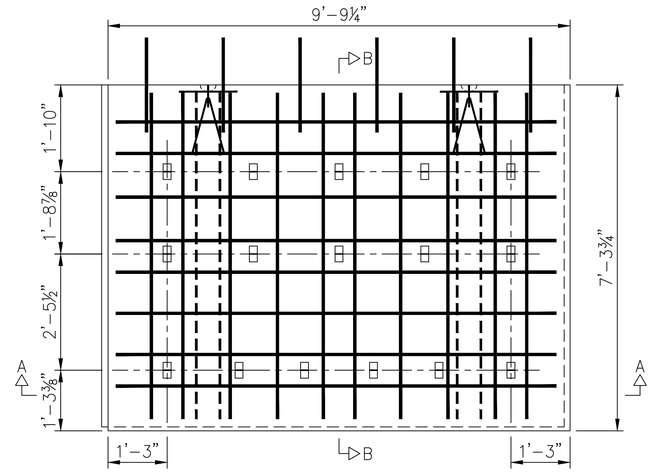

NNT-16-D

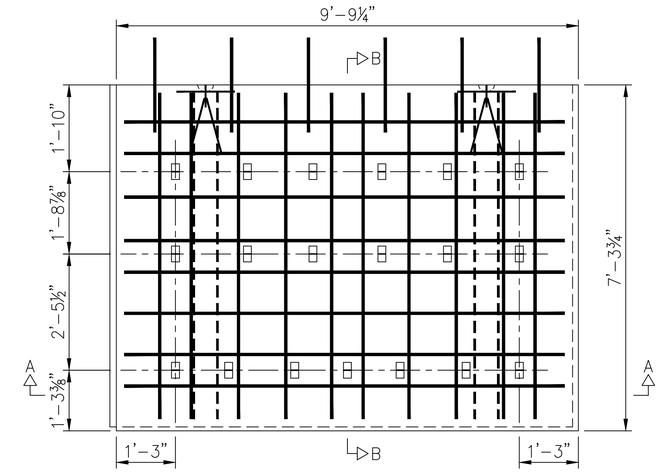

NNT-19-D

NOTE:
SEE SECTIONS AND DETAILS ON SHEETS 2, 3, AND 4.

NO.	DATE	REVISION DESCRIPTION
1	9/24/19	REVISED PER E.L. ROBINSON COMMENT

This drawing contains information proprietary to The Reinforced Earth Company, and is being furnished for the use of The Ohio Department of Transportation only in connection with this project, and the information contained is not to be transmitted to any other organization unless specifically authorized in writing by The Reinforced Earth Company. The Reinforced Earth Company is the exclusive licensee in the United States under patents held by our affiliated companies, and the furnishing of this drawing does not constitute an expressed or implied license under any applicable patents.

The design contained on these drawings is based on information provided by the Owner. On the basis of this information, The Reinforced Earth Company has designed, and is responsible for the internal stability of the structure only. External stability, including foundation (bearing capacity and settlement) and global stability (including sliding and rotation), is the responsibility of the Owner.

REINFORCED EARTH®
SUSTAINABLE TECHNOLOGY
12001 Sunrise Valley Drive, Suite 400, Reston, VA 20191 (703) 547-8797
"REINFORCED EARTH®" IS A REGISTERED TRADEMARK OF THE REINFORCED EARTH COMPANY.

DESIGNED	DRAWN	REVIEWED	DATE:
CAA	KC	MA	09/06/2019
CHECKED	REVISED	STRUCTURE FILE NUMBER:	
MA		96833	

PRECAST PANEL SHOP DRAWINGS
CUY-IR490/SR10-2.09/19.28
CUYAHOGA COUNTY

CUY-IR490
SR10-2.09/19.28

RE-18631

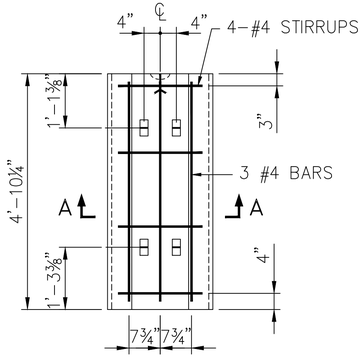

CE5A26-4-R4
ELEVATION VIEW (BACK FACE)

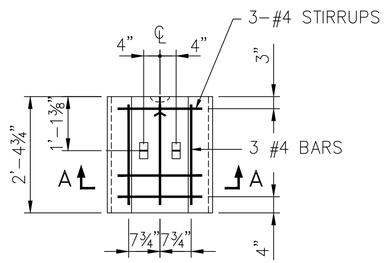

CE5B26-2-R4
ELEVATION VIEW (BACK FACE)

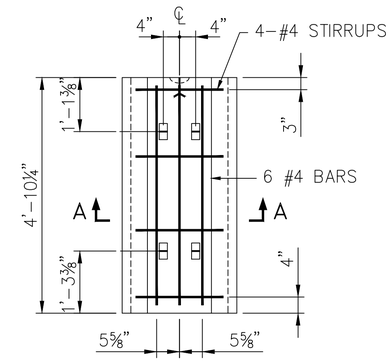

CE5A58-4-R4
ELEVATION VIEW (BACK FACE)

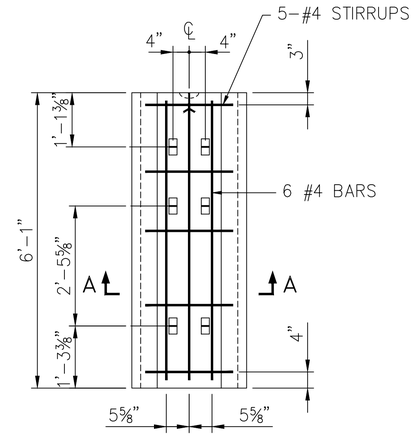

CE5L58-6-R4
ELEVATION VIEW (BACK FACE)

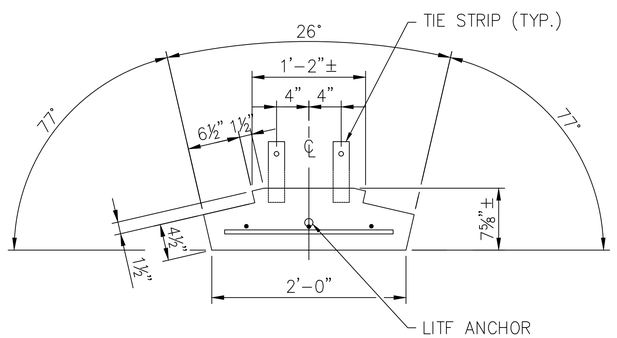

SECTION A-A

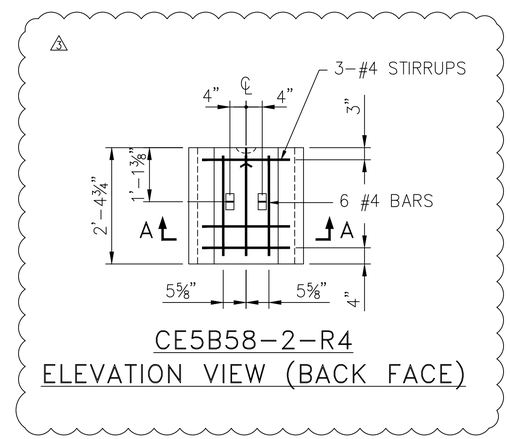

CE5B58-2-R4
ELEVATION VIEW (BACK FACE)

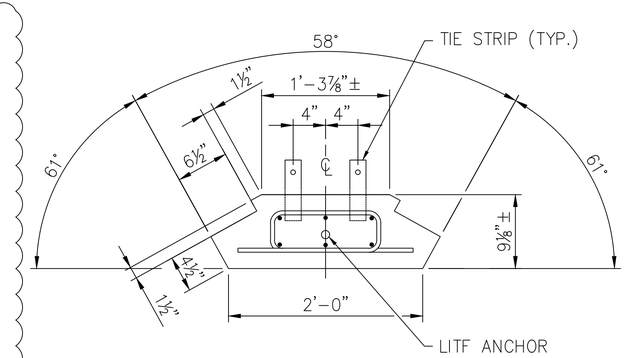

SECTION A-A

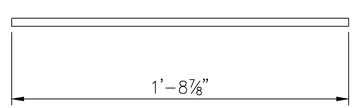

STIRRUP DETAIL
(DIMENSIONS SHOWN ARE OUT TO OUT)

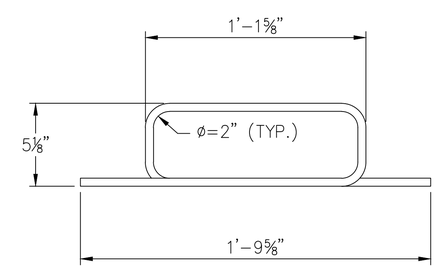

STIRRUP DETAIL
(DIMENSIONS SHOWN ARE OUT TO OUT)

NO.	DATE	REVISION DESCRIPTION
3	10/28/19	MISCELLANEOUS CLARIFICATIONS

This drawing contains information proprietary to The Reinforced Earth Company, and is being furnished for the use of The Ohio Department of Transportation only in connection with this project, and the information contained is not to be transmitted to any other organization unless specifically authorized in writing by The Reinforced Earth Company. The Reinforced Earth Company is the exclusive licensee in the United States under patents held by our affiliated companies, and the furnishing of this drawing does not constitute an expressed or implied license under any applicable patents.

The design contained on these drawings is based on information provided by the Owner. On the basis of this information, The Reinforced Earth Company has designed, and is responsible for the internal stability of the structure only. External stability, including foundation (bearing capacity and settlement) and global stability (including sliding and rotation), is the responsibility of the Owner.

REINFORCED EARTH®
SUSTAINABLE TECHNOLOGY
12001 Sunrise Valley Drive, Suite 400, Reston, VA 20191 (703) 547-8797
"REINFORCED EARTH®" IS A REGISTERED TRADEMARK OF THE REINFORCED EARTH COMPANY.

DATE: 09/06/2019
REVIEWED MA
PSTRUCTURE FILE NUMBER: 96833
DRAWN KC
REVISED
DESIGNED CAA
CHECKED MA

CORNER ELEMENTS DETAILS "CE5"
CUY-IR490/SR10-2.09/19.28
CUYAHOGA COUNTY

CUY-IR490
SR10-2.09/19.28

RE-18631

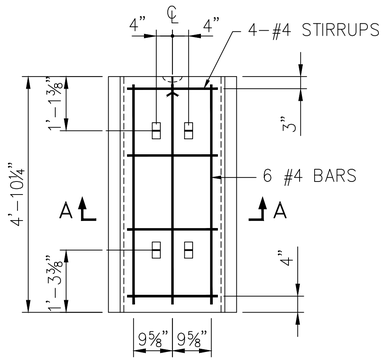

CE5A117-4-R4
ELEVATION VIEW (BACK FACE)

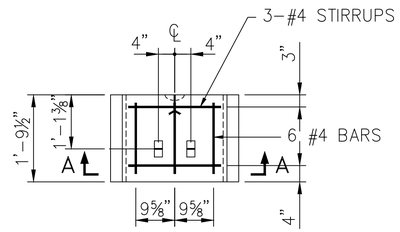

CE5C117-2-R4
ELEVATION VIEW (BACK FACE)

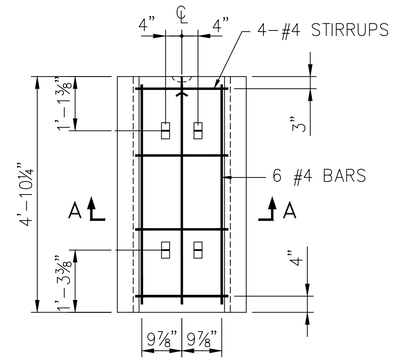

CE5A121-4-R4
ELEVATION VIEW (BACK FACE)

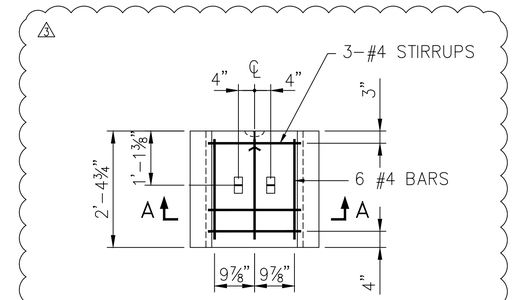

CE5B121-2-R4
ELEVATION VIEW (BACK FACE)

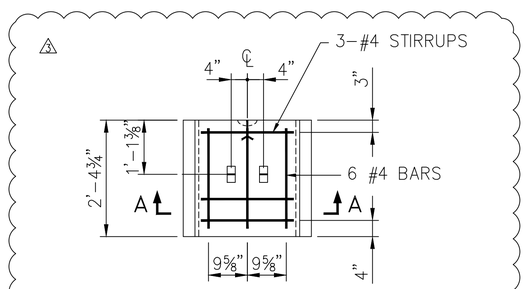

CE5B117-2-R4
ELEVATION VIEW (BACK FACE)

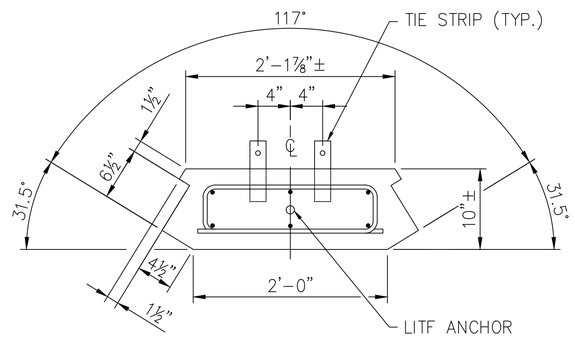

SECTION A-A

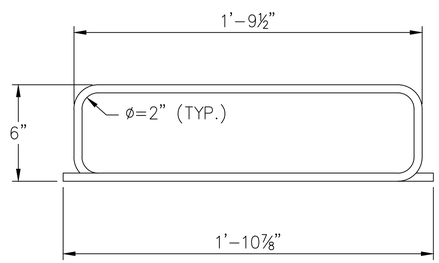

STIRRUP DETAIL
(DIMENSIONS SHOWN ARE OUT TO OUT)

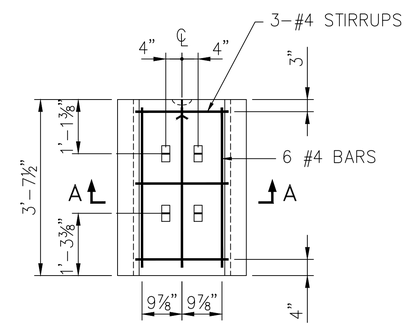

CE5F121-4-R4
ELEVATION VIEW (BACK FACE)

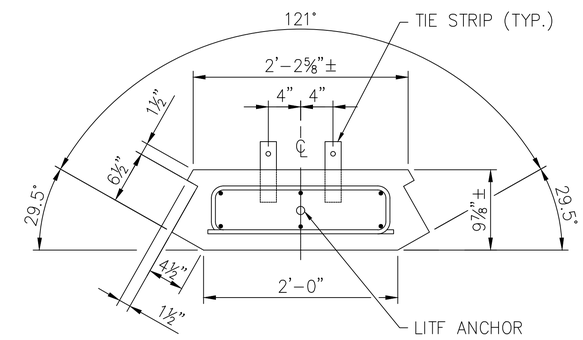

SECTION A-A

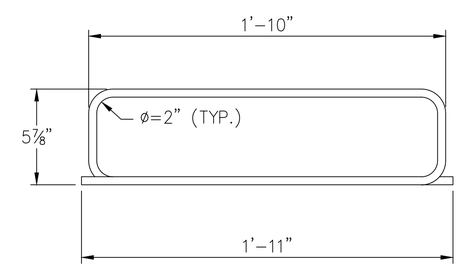

STIRRUP DETAIL
(DIMENSIONS SHOWN ARE OUT TO OUT)

NO.	DATE	REVISION DESCRIPTION
3	10/28/19	MISCELLANEOUS CLARIFICATIONS

This drawing contains information proprietary to The Reinforced Earth Company, and is being furnished for the use of The Ohio Department of Transportation only in connection with this project, and the information contained is not to be transmitted to any other organization unless specifically authorized in writing by The Reinforced Earth Company. The Reinforced Earth Company is the exclusive licensee in the United States under patents held by our affiliated companies, and the furnishing of this drawing does not constitute an expressed or implied license under any applicable patents.

The design contained on these drawings is based on information provided by the Owner. On the basis of this information, The Reinforced Earth Company has designed, and is responsible for the internal stability of the structure only. External stability, including foundation (bearing capacity and settlement) and global stability (including sliding and rotation), is the responsibility of the Owner.

REINFORCED EARTH®
SUSTAINABLE TECHNOLOGY
12001 Sunrise Valley Drive, Suite 400, Reston, VA 20191 (703) 547-8797
"REINFORCED EARTH®" IS A REGISTERED TRADEMARK OF THE REINFORCED EARTH COMPANY.

DESIGNED	DRAWN	REVIEWED	DATE:
CAA	KC	MA	09/06/2019
CHECKED	REVISED	PSTRUCTURE FILE NUMBER:	
MA		96833	

CORNER ELEMENTS DETAILS "CE5"
CUY-IR490/SR10-2.09/19.28
CUYAHOGA COUNTY

CUY-IR490
SR10-2.09/19.28

RE-18631

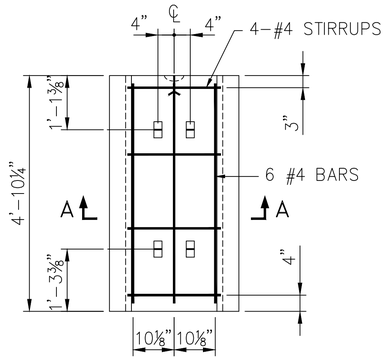

CE5A125–4–R4
ELEVATION VIEW (BACK FACE)

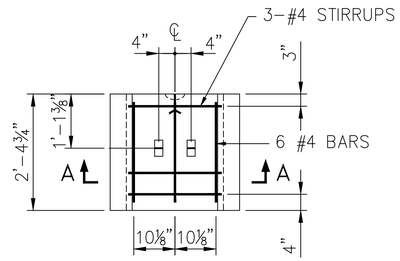

CE5C125–2–R4
ELEVATION VIEW (BACK FACE)

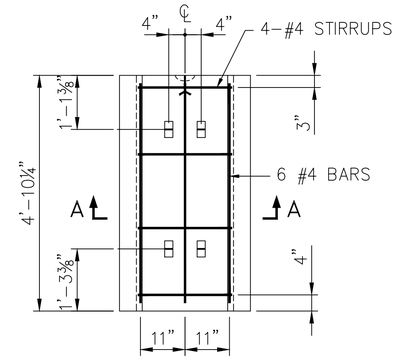

CE5A137–4–R4
ELEVATION VIEW (BACK FACE)

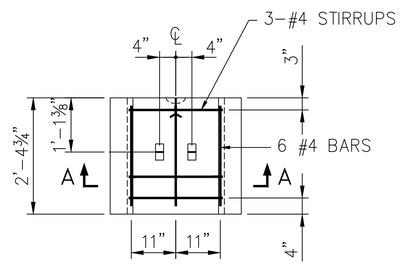

CE5B137–2–R4
ELEVATION VIEW (BACK FACE)

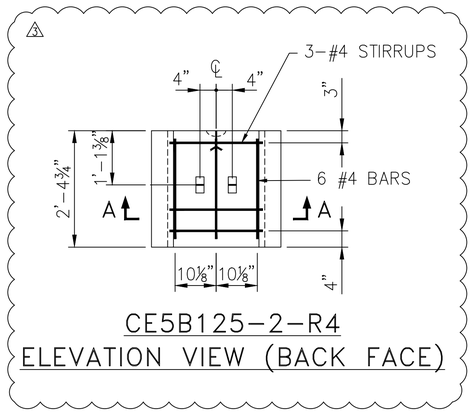

CE5B125–2–R4
ELEVATION VIEW (BACK FACE)

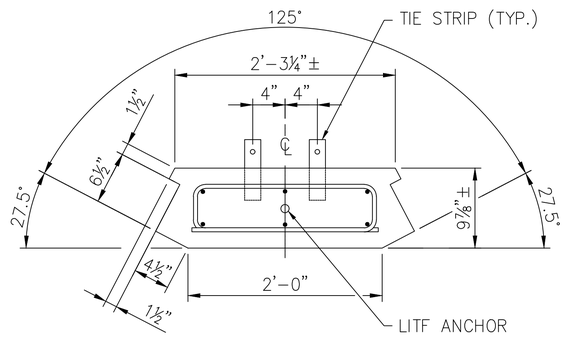

SECTION A–A

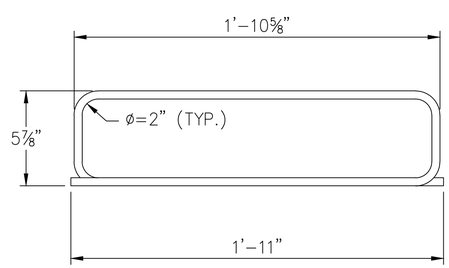

STIRRUP DETAIL
(DIMENSIONS SHOWN ARE OUT TO OUT)

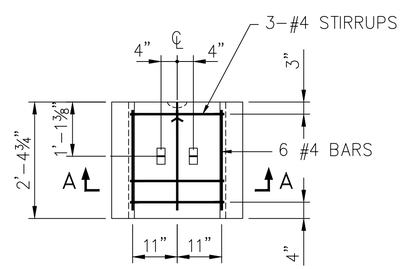

CE5D137–2–R4
ELEVATION VIEW (BACK FACE)

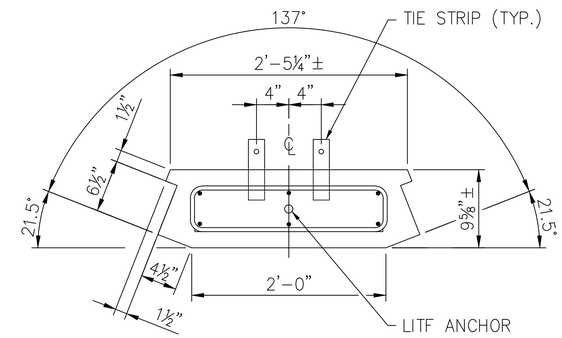

SECTION A–A

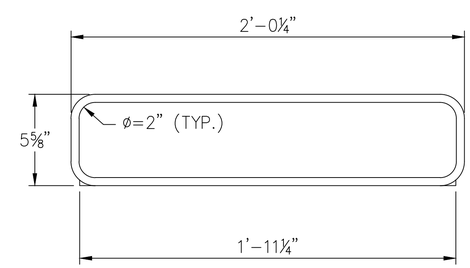

STIRRUP DETAIL
(DIMENSIONS SHOWN ARE OUT TO OUT)

NO.	DATE	REVISION DESCRIPTION
3	10/28/19	MISCELLANEOUS CLARIFICATIONS

This drawing contains information proprietary to The Reinforced Earth Company, and is being furnished for the use of The Ohio Department of Transportation only in connection with this project, and the information contained is not to be transmitted to any other organization unless specifically authorized in writing by The Reinforced Earth Company. The Reinforced Earth Company is the exclusive licensee in the United States under patents held by our affiliated companies, and the furnishing of this drawing does not constitute an expressed or implied license under any applicable patents.

The design contained on these drawings is based on information provided by the Owner. On the basis of this information, The Reinforced Earth Company has designed, and is responsible for the internal stability of the structure only. External stability, including foundation (bearing capacity and settlement) and global stability (including sliding and rotation), is the responsibility of the Owner.

REINFORCED EARTH®
SUSTAINABLE TECHNOLOGY
12001 Sunrise Valley Drive, Suite 400, Reston, VA 20191 (703) 547-8797
"REINFORCED EARTH®" IS A REGISTERED TRADEMARK OF THE REINFORCED EARTH COMPANY.

DATE:	REVIEWED	DRAWN	DESIGNED
09/06/2019	MA	KC	CAA
PSTRUCTURE FILE NUMBER: 96833		REVISED	CHECKED MA

CORNER ELEMENTS DETAILS "CE5"
CUY–IR490/SR10–2.09/19.28
CUYAHOGA COUNTY

CUY–IR490
SR10–2.09/19.28

RE–18631

REINFORCED EARTH®
45610 Woodland Rd., Suite 200, Sterling, VA 20166
www.reinforcedearth.com

DESIGN SUBMITTAL FOR
CUY-IR490/SR010-2.09/19.28

		SHEET INDEX	
		SHEET NO.	DRAWING NAME
2		1	COVER SHEET
		2	GENERAL NOTES
2	1	3	MSE PLAN & ELEVATION VIEW
2		3A	STRIP SKEW PLAN VIEW
2		4–5	TYPICAL MSE SECTION(S) & DETAILS
2	1	6	STANDARD PANEL DETAILS
2		6A	ANGLE DETAILS

REAR ABUTMENT MSE WALL AT
EAST 89TH ST.

3	12/23/20	REVISED PER ODOT COMMENT
2	10/15/20	REVISED PER ODOT COMMENT
1	6/4/20	REVISED PER 2LMN COMMENT

This drawing contains information proprietary to The Reinforced Earth Company, and is being furnished for the use of The Ohio Department of Transportation only in connection with this project, and the information contained is not to be transmitted to any other organization unless specifically authorized in writing by The Reinforced Earth Company. The Reinforced Earth Company is the exclusive licensee in the United States under patents held by our affiliated companies, and the furnishing of this drawing does not constitute an expressed or implied license under any applicable patents.

The design contained on these drawings is based on information provided by the Owner. On the basis of this information, The Reinforced Earth Company has designed, and is responsible for the internal stability of the structure only. External stability, including foundation (bearing capacity and settlement) and global stability (including sliding and rotation), is the responsibility of the Owner.

CERTIFIED WITH RESPECT TO INTERNAL STABILITY OF REINFORCED EARTH STRUCTURES ONLY.

STATE OF OHIO
CONSTANCE ANNE ARNOLD
E-83188
REGISTERED
PROFESSIONAL ENGINEER
12/23/20

REINFORCED EARTH®
45610 Woodland Rd., Suite 200, Sterling, VA 20166
"REINFORCED EARTH®" AND THE REINFORCED EARTH LOGO ARE REGISTERED TRADEMARKS OF THE REINFORCED EARTH COMPANY.

DESIGNED: MS	DRAWN: MS	REVIEWED: CA	DATE: 04/27/2020
CHECKED: CA	REVISED:	PID No: 96833	

COVER SHEET
CUY–IR490/SR010–2.09/19.28
CITY OF CLEVELAND, CUYAHOGA COUNTY, OHIO
OHIO DEPARTMENT OF TRANSPORTATION

CUY–IR490
SR010–2.09/19.28

18631

R:\RE18631_RLA_OH_CUY–IR 490\2nd Structure (2020–04–23) Rear Abut. At E. 89th St\Dwg\(2020–04–27) 18631 R. Abut. At E. 89th St. MSE Wall Design.dwg

GENERAL NOTES:

DESIGN CRITERIA:

1. DESIGN IS BASED ON THE PARAMETERS BELOW, AND THE ASSUMPTION THAT THE FOUNDATION AND BACKFILL MATERIALS, METHODS OF CONSTRUCTION AND MATERIALS INSTALLED SHALL CONFORM TO THE APPLICABLE PROJECT TECHNICAL SPECIFICATIONS FOR M.S.E. WALLS.

2. CONTRACT DOCUMENT REFERENCE:
THE M.S.E. WALLS SHOWN IN THESE PLANS WERE DESIGNED AND DETAILED PER INFORMATION REFERENCED IN THE FOLLOWING CONTRACT DOCUMENTS:
   - CONTRACT PLANS: RFC PLANS DATED 09/30/2019, SHT's 1 TO 39
   - AASHTO SPECIFICATIONS: LRFD BRIDGE DESIGN SPECIFICATIONS, 7TH EDITION, (INCLUDING 2015 INTERIMS)
   - DOT SPECIFIED DOCUMENTS: ODOT BRIDGE DESIGN MANUAL, 2007.
   - SS840 DATED 4/15/2016

3. SOIL DESIGN PARAMETERS: (TO BE VERIFIED BY GEOTECHNICAL ENGINEER OF RECORD)

SELECT GRANULAR BACKFILL (REINFORCED SOIL ZONE):
Φ = 34 degrees (MINIMUM), c = 0 p.s.f., γ = 120 p.c.f.

RETAINED BACKFILL (COMPACTED EMBANKMENT FILL / IN SITU MATERIAL BEYOND SOIL REINFORCEMENT LIMITS):
Φ = 30 degrees, c = 0 p.s.f., γ = 120 p.c.f.

FOUNDATION MATERIAL:
Φ = 30 degrees, c = 0 p.s.f.

IF THE TESTED UNIT WEIGHT (γ) FOR THE SELECT MATERIAL VARIES (+ OR −) BY MORE THAN 10% FROM THE VALUE INDICATED ABOVE, THE CONTRACTOR SHALL CONTACT RECo AND THE GEOTECHNICAL ENGINEER OF RECORD TO ASSESS ANY POTENTIAL CHANGES TO THE MSE WALL DESIGN.

IF THE SHEAR STRENGTH (Φ), Cohesion (c) or COEFFICIENT OF SLIDING (μ) FOR THE FOUNDATION MATERIAL IS LESS THAN THE VALUES INDICATED ABOVE, THE CONTRACTOR SHALL CONTACT THE GEOTECHNICAL ENGINEER OF RECORD TO DETERMINE IF FOUNDATION IMPROVEMENT IS REQUIRED, AND CONTACT RECo TO ASSESS ANY POTENTIAL CHANGES TO THE MSE WALL DESIGN.

IF THE TESTED UNIT WEIGHT (γ) FOR THE RETAINED MATERIAL IS HEAVIER BY MORE THAN 10% FROM THE VALUE INDICATED ABOVE, THE CONTRACTOR SHALL CONTACT RECo AND THE GEOTECHNICAL ENGINEER TO ASSESS ANY POTENTIAL CHANGES TO THE MSE WALL DESIGN. IF THE SHEAR STRENGTH (Φ) FOR THE RETAINED MATERIAL IS LESS THAN THE VALUE INDICATED ABOVE, THE CONTRACTOR SHALL CONTACT RECo AND THE GEOTECHNICAL ENGINEER OF RECORD TO ASSESS ANY POTENTIAL CHANGES TO THE MSE WALL DESIGN.

4. DESIGN VEHICULAR SURCHARGE LOADING (IN ACCORDANCE WITH PROJECT SPECIFICATIONS)
HS−20/HL−93 TRUCK = 250 PSF EQUIVALENT DESIGN SURCHARGE

NOTE: THE DESIGN DOES NOT INCLUDE HEAVY TRUCK, EXCAVATOR OR CRANE LOADS (EQUIPMENT WITH A GROSS OPERATING WEIGHT GREATER THAN 72,000 LBS). COMPACTION EQUIPMENT SHALL BE SIZED BY THE CONTRACTOR WITH CONSIDERATION OF NECESSARY OFFSETS TO WALL FACING, BACKFILL TYPE AND LIFT THICKNESS (TYPICAL ROLLER STATIC WEIGHT: 8 TO 15 TON − DEPENDING ON APPLICATION). CONTRACTOR TO COORDINATE ANY HEAVY EQUIPMENT LOADING WITH RECo PRIOR TO FABRICATION OF WALL MATERIALS. ALL COSTS DUE TO LOADING IN EXCESS OF SPECIFICATIONS SHALL BE BORNE BY CONTRACTOR.

DESIGN LIFE: THE M.S.E. WALL HAS BEEN DESIGNED FOR A 100 YEAR SERVICE LIFE IN ACCORDANCE WITH PROJECT SPECIFICATIONS.

FOUNDATION PREPARATION:

5. THE CALCULATED MAXIMUM APPLIED BEARING PRESSURE AT THE FOUNDATION LEVEL IS SHOWN ON THE WALL ELEVATIONS FOR EACH DESIGN CASE. IT IS THE RESPONSIBILITY OF THE GEOTECH TO DETERMINE IF THE FOUNDATION SOILS HAVE ADEQUATE STRENGTH TO RESIST THE APPLIED DESIGNED BEARING PRESSURES.

M.S.E. WALL SUB−GRADE (ENTIRE FOOTPRINT = 2.0' IN FRONT OF WALL ALIGNMENT TO 2.0' BEYOND THE END OF THE DESIGNED LENGTH OF SOIL REINFORCEMENT AND ALONG THE ENTIRE LENGTH), SHOULD BE PROOF ROLLED WITH A HEAVY ROLLER, OR OTHERWISE EVALUATED IN ACCORDANCE WITH THE RECOMMENDATIONS OF THE GEOTECH. ANY UNSUITABLE FOUNDATION MATERIAL BELOW THE REINFORCED EARTH VOLUME, AS DETERMINED BY THE GEOTECH, SHALL BE EXCAVATED AND REPLACED WITH SUITABLE MATERIAL (PLACED IN CONTROLLED, COMPACTED LIFTS) OR OTHERWISE STABILIZED AS DIRECTED BY THE GEOTECH.

SOIL REINFORCEMENT NOTES:

6. SOIL REINFORCEMENT MAY BE ONE OR MORE OF THE FOLLOWING AS DESIGNED AND SUPPLIED BY RECo.
   - HIGH ADHERENCE "HA" STEEL STRIPS SHALL BE RIBBED, 50mm WIDE BY 4mm THICK AND COMPLY WITH THE FOLLOWING SPECIFIED REQUIREMENTS DEFINED WITHIN ASTM A6/A6M−07 "GENERAL REQUIREMENTS", AND ASTM A572/A572M, GRADE 65, TYPE 1, 2, OR 3.
   - HA STEEL STRIPS SHALL BE HOT−DIP GALVANIZED AFTER FABRICATION HAS BEEN COMPLETED. GALVANIZATION SHALL CONFORM TO THE MINIMUM REQUIREMENTS DEFINED WITHIN ASTM A123/A123M, SECTION 6.1, TABLE 2, COATING GRADE 85. (2 oz/sf).

WALL CONSTRUCTION:

7. FOR GENERAL INFORMATION PERTAINING TO WALL CONSTRUCTION PLEASE REFER TO THE "CONSTRUCTION AND QUALITY CONTROL PROCEDURE MANUAL" FOR RECTANGULAR PANELS AVAILABLE ONLINE AT www.reinforcedearth.com

8. REINFORCED EARTH WALLS ALIGNED ALONG CURVES WILL FORM A SERIES OF SHORT CHORDS 9.84' EACH TO MATCH THE DESIRED WALL ALIGNMENT.

9. FOR LOCATION OF REINFORCED EARTH WALLS SEE CONTRACTS AND RECo PLAN VIEW (DRAWING 3 OF THESE PLANS).

10. BACKFILL MATERIAL SHALL BE PLACED AND COMPACTED IN LIFTS (NO THICKER THAN 8" LOOSE LIFTS) AND IN ACCORDANCE WITH THE SPECIFICATIONS COVERING MSE WALLS, TO A LEVEL OF 2"(±) ABOVE THE LEVEL OF TIE STRIPS EMBEDDED AND PROTRUDING FROM THE REAR FACE OF THE PRECAST CONCRETE WALL FACING PANELS. INSTALLATION OF THE REINFORCING STRIPS SHALL BE PERMITTED ONLY AFTER PLACEMENT AND COMPACTION OF THE BACKFILL MATERIAL HAS REACHED THE REQUIRED LEVEL. WHERE THE PROJECT OR DEPARTMENT COMPACTION REQUIREMENTS ARE STRICTER (I.E. 98% DENSITY REQUIREMENT, 8" LOOSE LIFTS) THE STRICTER REQUIREMENT WILL BE USED.

11. M.S.E. SELECT BACKFILL SHALL BE COMPACTED IN ACCORDANCE WITH THE PROJECT SPECIFICATIONS, AS A MINIMUM: M.S.E. SELECT FILL SHALL BE COMPACTED TO 95% STANDARD PROCTOR (ASTM D−698 OR AASHTO T−99, WITH OVERSIZE CORRECTION) AT A MOISTURE CONTENT 1% TO 2% BELOW OPTIMUM MOISTURE CONTENT. IF 30% OR MORE OF THE SELECT GRANULAR BACKFILL IS GREATER THAN ¾" IN SIZE, ASTM D−698/AASHTO T−99 IS NOT APPLICABLE. FOR SUCH A MATERIAL, THE ACCEPTANCE CRITERION FOR CONTROL OF COMPACTION SHALL BE EITHER A MINIMUM OF 70% OF THE RELATIVE DENSITY OF THE MATERIAL AS DETERMINED BY ASTM D−4253 AND D−4254, OR A METHOD SPECIFICATION, BASED ON A TEST COMPACTION SECTION WHICH DEFINES THE TYPE OF EQUIPMENT, LIFT THICKNESS NUMBER OF PASSES OF THE SPECIFIED EQUIPMENT, AND PLACEMENT MOISTURE CONTENT. WHERE THE DEPARTMENT'S COMPACTION REQUIREMENTS ARE MORE STRICT, THAT DEPARTMENT'S REQUIREMENTS SHALL BE USED IN GENERAL.

12. HEAVY COMPACTION AND OPERATION EQUIPMENT SHALL BE KEPT A MINIMUM DISTANCE OF 3'−0" FROM THE BACK FACE OF THE PRECAST CONCRETE WALL FACING PANELS. COMPACTION WITHIN THE 3'−0" ZONE SHALL BE ACHIEVED WITH AT LEAST SIX (6) PASSES OF A LIGHTWEIGHT MECHANICAL TAMPER, ROLLER OR VIBRATORY SYSTEM (LESS THAN 1,000 LBS.), SMALLER LIFTS MAY BE REQUIRED TO ACHIEVE ADEQUATE COMPACTION (GENERALLY REGARDED AS 90% STANDARD PROCTOR FOR THIS ZONE). COMPACTION DENSITY TESTS ARE NOT REQUIRED WITHIN SAID 3 FT. ZONE, EXCEPT WHERE REQUIRED BY PROJECT SPECIAL PROVISIONS AND IF STRUCTURAL FOOTINGS ARE TO BE PLACED ATOP THE MSE WALL WITHIN THE 3 FT ZONE.

13. THE FINISHED GRADE BACKFILL IN FRONT OF THE WALL SHALL BE PLACED AND COMPACTED AS SOON AS POSSIBLE (AS CONSTRUCTION SEQUENCE PERMITS TO ALLOW FOR BOTTOM PANELS TO MOVE TOWARDS A PLUMB POSITION) TO MITIGATE THE POTENTIAL FOR EROSION AND UNDERMINING OF THE CONCRETE LEVELING PAD. IN ANY EVENT, BACKFILL IN FRONT OF THE WALL SHALL BE PLACED AND COMPACTED BEFORE WALL CONSTRUCTION EXCEEDS A HEIGHT OF 20 FT. FINISHED GRADE BACKFILL SHALL BE PLACED IN LIFTS AND PROPERLY COMPACTED AS REQUIRED BY PROJECT SPECIFICATIONS.

14. FOR MANHOLES, DRAIN PIPES, DROP INLETS AND/OR OTHER UTILITIES LOCATED WITHIN THE MSE VOLUME, WHERE REINFORCING STRIPS ARE BLOCKED FROM BEING PLACED NORMALLY, REINFORCING STRIPS MAY BE SKEWED UP TO THE MAXIMUM OF 15° TO AVOID THE OBSTRUCTION. IF SPECIFIC DETAILS HAVE NOT BEEN INCLUDED ADDRESSING AN OBSTRUCTION, AND THE ANGLE OF THE NECESSARY SKEW TO CLEAR THE OBSTRUCTION IS GREATER THAN 15°, THE CONTRACTOR SHALL CONTACT RECo FOR APPROPRIATE DETAIL TO ACCOMMODATE THE OBSTRUCTION.

15. IF PILES ARE TO BE LOCATED WITHIN THE MSE VOLUME, THEY SHALL BE ALIGNED AND DRIVEN PRIOR TO THE CONSTRUCTION OF THE MSE STRUCTURE. UNLESS A METHOD TO PROTECT THE MSE STRUCTURE AND ALL NECESSARY ELEMENTS HAS BEEN DEVISED BY THE CONTRACTOR AND FOUND ACCEPTABLE TO THE GEOTECH AND/OR ON−SITE ENGINEER, AND RECo.

16. STRUCTURAL FOUNDATIONS, DRAINAGE ELEMENTS, SLABS, AND/OR LOADINGS PROPOSED ATOP THE MSE COMPACTED MASS SHALL BE CONSTRUCTED ONLY AFTER THE GEOTECH HAS DETERMINED THAT SUFFICIENT SETTLEMENT OF THE M.S.E. STRUCTURE AND EMBANKMENT HAS TAKEN PLACE TO ADEQUATELY SUPPORT THE SUPERIMPOSED ELEMENTS AND/OR LOADINGS.

17. IT IS THE CONTRACTOR'S RESPONSIBILITY TO DETERMINE THE LOCATION OF ANY GUARDRAIL, FENCE AND/OR LIGHT POSTS (ETC.) BEHIND THE RECo WALL PANELS. PRIOR TO THE PLACEMENT OF THE TOP LAYER(S) OF SOIL REINFORCEMENT STRIPS, INDIVIDUAL STRIPS MAY BE SKEWED TO AVOID THE PROPOSED VERTICAL OBSTRUCTIONS IF AUTHORIZED BY RECo. ANY DAMAGE DONE TO THE SOIL REINFORCEMENT STRIPS DUE TO THE INSTALLATION OF THE VERTICAL OBSTRUCTIONS SHALL BE REPAIRED OR REPLACED BY THE CONTRACTOR, AND AT THE CONTRACTOR'S EXPENSE.

18. IF EXISTING AND/OR PROPOSED STRUCTURES, PIPES, FOUNDATIONS OR SAFETY GUARDRAIL POST WHICH ARE LOCATED WITHIN THE RECo VOLUME MASS, AND MAY INTERFERE WITH THE NORMAL PLACEMENT OF THE SOIL REINFORCING STRIPS AND SPECIFIC DIRECTION HAS NOT BEEN PROVIDED ON THE PLANS, THE CONTRACTOR SHALL NOTIFY RECo TO OBTAIN NECESSARY DETAILS FOR REINFORCING STRIP PLACEMENT.

19. ALL DESIGN, DETAILING, FABRICATION AND CHECKING OF REQUIRED REINFORCING STEEL FOR ANY C.I.P. CONCRETE WORK IS THE RESPONSIBILITY OF THE CONTRACTOR, UNLESS OTHERWISE STATED AND DETAILED WITHIN THESE PLANS PREPARED BY THE REINFORCED EARTH COMPANY.

20. PRECAST TOP OUT PANELS BENEATH CAST−IN−PLACE COPING, PRECAST COPING AND PRECAST TRAFFIC BARRIER (LEVEL UP CONCRETE) MAY HAVE #4 DOWELS PROTRUDING FROM THE PANELS AS DETAILED IN PANEL CASTING SHOP DRAWINGS. DOWELS SHALL BE FIELD CUT BY CONTRACTOR WHERE PANELS ARE EMBEDDED INTO A CAST IN PLACE MOMENT SLAB OR OTHER FOOTING/SLAB ELEMENT. EXPANSION JOINT MATERIAL, AND/OR BOND BREAKER SHALL BE PLACED BETWEEN EACH SIDE OF FACING PANEL IN CONTACT WITH CAST IN PLACE CONCRETE ELEMENTS (EXCEPT AS SHOWN IN THE PLANS).

21. THE CONTRACTOR IS RESPONSIBLE FOR GRADUALLY DEFLECTING THE UPPER LEVEL OF SOIL REINFORCEMENT STRIPS DOWNWARD TO AVOID CONFLICTS WITH PAVING AND ROADWAY SUBGRADE PREPARATION. THE CONTRACTOR'S ATTENTION IS DIRECTED ESPECIALLY TO SITUATIONS WHERE ROADWAY SUPER−ELEVATION AND/OR SOIL MIXING ARE ANTICIPATED. SPECIAL ATTENTION SHOULD BE DIRECTED TO PROPER PLACEMENT OF IMPERVIOUS MEMBRANES, GEOTEXTILES, FOUNDATION AREAS AND UNDERGROUND UTILITIES. A MINIMUM OF 3" SELECT BACKFILL COVER IS REQUIRED BETWEEN SOIL REINFORCING STRIPS AND ANY ELEMENT OTHER THAN SELECT FILL MATERIAL.

22. THE CONTRACTOR IS RESPONSIBLE FOR CONTROLLING STORM WATER DRAINAGE IN THE VICINITY OF THE WALL DURING CONSTRUCTION. STORM WATER RUNOFF IS TO BE COLLECTED AND DISCHARGED AWAY FROM THE WALL AND THE REINFORCED BACKFILL MASS. M.S.E. WALL BACKFILL SHALL NOT BE PLACED OR TRAVELED UPON WHEN SATURATED. COMPACTED BACKFILL SHALL BE RE−WORKED OR ALLOWED TO DRY WHEN THE MOISTURE CONTENT EXCEEDS OPTIMUM.

23. FINISHED GRADE TREATMENT DESIGN ALONG TOP AND TOE OF M.S.E. WALLS, INCLUDING EROSION CONTROL, IS THE RESPONSIBILITY OF THE CIVIL ENGINEER OF RECORD.

MATERIALS NOTES:

24. SELECT BACKFILL GRADATION REQUIREMENTS:

SIEVE SIZE	MIN. PERCENT PASSING
4"	100
No. 40	0 − 60
No. 200	0 − 15

PLASTICITY INDEX (PI), AS DETERMINED BY AASHTO T−90, SHALL NOT EXCEED 6.

25. SELECT BACKFILL ELECTROCHEMICAL REQUIREMENTS:

PROPERTY	REQUIREMENT	TEST METHOD
RESISTIVITY	MINIMUM 3,000 ohm−cm AT 100% SATURATION	AASHTO T−288 / ASTM G−57
pH	4.5 TO 9	AASHTO T−289 / ASTM G−51
CHLORIDES*	MAXIMUM 100 ppm	AASHTO T−291 / ASTM D−512
SULFATES*	MAXIMUM 200 ppm	AASHTO T−29 / ASTM D−516

* IF THE MINIMUM RESISTIVITY EXCEEDS 5,000 ohm−cm AT 100% SATURATION, THE NEED FOR TESTING OF CHLORIDES AND SULFATES IS WAIVED.

SPECIAL REFERENCE KEY:
- THE REINFORCED EARTH COMPANY (HEREINAFTER REFERRED TO AS "RECo")
- GEOTECHNICAL ENGINEER OF RECORD (HEREINAFTER REFERRED TO AS "GEOTECH")
- MECHANICALLY STABILIZED EARTH (HEREINAFTER REFERRED TO AS "MSE")
- CAST−IN−PLACE (HEREINAFTER REFERRED TO AS "C.I.P.")
- INTERNAL STABILITY: FAILURE MODES NOT ENGAGING OUTSIDE THE VOLUME LIMITED BY THE TOP OF LEVELING PAD ELEVATION, THE TOP OF PANEL ELEVATION, THE FACING ELEMENTS AND THE END OF THE SOIL REINFORCEMENT.
- INTERNAL STABILITY INCLUDES:
  - •• SOIL REINFORCEMENT TENSILE CAPACITY
  - •• SOIL REINFORCEMENT PULL−OUT CAPACITY
  - •• FACING ELEMENTS STRUCTURAL CAPACITY
  - •• STRUCTURAL CAPACITY OF CONNECTIONS BETWEEN SOIL REINFORCEMENTS AND FACING ELEMENTS.

26. SELECT BACKFILL DURABILITY REQUIREMENTS:
THE MATERIAL SHALL BE SUBSTANTIALLY FREE OF SHALE OR OTHER SOFT, POOR DURABILITY PARTICLES. THE MATERIAL SHALL HAVE A MAGNESIUM SULFATE SOUNDNESS LOSS OF LESS THAN 30 PERCENT AFTER FOUR (4) CYCLES, AS DETERMINED BY AASHTO T−104 (OR ASTM C−88).

27. NOMINAL STRIP LENGTHS:
THE REINFORCING STRIPS LENGTHS SHOWN ON THESE PLANS, ARE MEASURED FROM THE REAR FACE OF THE M.S.E. WALL FASCIA PANEL, AND ARE NOMINAL LENGTHS REQUIRED BY THE DESIGN CALCULATIONS. THE REQUIRED HORIZONTAL LIMIT OF GRANULAR BACKFILL IS EQUAL TO THE NOMINAL STRIP LENGTH. ADDITIONAL GRANULAR BACKFILL BEYOND THE NOMINAL STRIP IS NOT REQUIRED BY DESIGN, HOWEVER MAY BE REQUIRED BY SPECIAL PROVISIONS AS DIRECTED BY THE OWNER'S DESIGN.

28. PANEL FINISH:
   - THE PRECAST CONCRETE FACING PANEL SHALL HAVE A PLAIN FINISH. UNLESS NOTED OTHERWISE. CORNER ELEMENTS, SLIP JOINT UNITS AND PRECAST COPING UNITS SHALL HAVE A PLAIN SMOOTH FINISH.
   - ALL FACING ELEMENTS WILL BE PROVIDED WITH NATURAL CONCRETE GRAY CEMENT. ANY PREPARATION FOR, AND APPLICATION OF PENETRATING STAIN, SEALANTS OR OTHER COATINGS SHALL BE PROVIDED BY OTHERS.

29. NOTE TO CONTRACTORS:
ONLY THE FOLLOWING MATERIALS ARE SUPPLIED BY THE REINFORCED EARTH COMPANY:
   - PRECAST CONCRETE FACING PANELS, CORNER ELEMENTS AND SLIP JOINT COVERS.
   - SOIL REINFORCEMENTS: HIGH ADHERENCE (HA) STRIPS
   - BOLT SETS FOR ATTACHING REINFORCING STRIPS TO PANELS (BOLT, NUT & WASHER)
   - BEARING PADS, (CONTROL HORIZONTAL JOINT SPACING)
   - RUBBER SHIMS (CONTROL PANEL ALIGNMENT)
   - JOINT GEOTEXTILE AND ADHESIVE

ANY OTHER MATERIALS CALLED FOR IN THE CONTRACT PLANS OR SPECIFICATIONS ARE TO BE SUPPLIED BY THE CONTRACTOR. ANY JOINT MATERIALS SHOWN AT THE INTERFACE OF PRECAST PANELS AND CAST−IN−PLACE CONCRETE STRUCTURES ARE TO BE SUPPLIED BY THE ERECTION CONTRACTOR. ALL SANDBLASTING, PAINTING, SEALERS OR OTHER SPECIAL APPLIED COATINGS ARE ALSO SUPPLIED/INSTALLED BY THE CONTRACTOR IN THE FIELD FOLLOWING PANEL ERECTION.

30. HANDLING, LOADING AND LIFTING PROCEDURES REFERENCED IN THESE PLANS OR THE CONSTRUCTION AND QUALITY CONTROL PROCEDURE MANUAL WHEN FURNISHED BY THE REINFORCED EARTH COMPANY ("RECo"), ARE GENERAL IN NATURE AND DO NOT INCLUDE ANY ANALYSIS OR ASSESSMENT OF SITE SPECIFIC CONDITIONS, THE NATURE OF ANY EQUIPMENT USED BY OTHERS, OR MEANS AND METHODS UTILIZED BY ANY CONTRACTOR, FABRICATOR, OR DELIVERY COMPANY. ALL FIRMS OR ENTITIES USING THESE PLANS OR INVOLVED IN THE HANDLING, TRANSPORT, LOADING, UNLOADING OR ERECTION OF PRODUCTS SUPPLIED BY RECo. SHALL MAKE AN INDEPENDENT REVIEW AND ASSESSMENT OF ALL HANDLING, LOADING AND LIFTING CONDITIONS AND PROCEDURES AND SHALL NOT SOLELY RELY ON ANY GENERAL RECOMMENDATIONS SUPPLIED BY RECo. THE CONTRACTOR SHALL DEVISE AND EXECUTE PROJECT SPECIFIC PROCEDURES FOR HANDLING, LOADING AND LIFTING WHICH COMPLY WITH ALL FEDERAL, STATE AND LOCAL SAFETY LAWS, REGULATIONS AND REQUIREMENTS AND ALL APPLICABLE CONTRACT REQUIREMENTS AT ALL LOCATIONS WHERE RECo MATERIALS ARE LOADED, UNLOADED, HANDLED OR ERECTED.

CERTIFIED WITH RESPECT TO INTERNAL STABILITY OF REINFORCED EARTH STRUCTURES ONLY.

STATE OF OHIO
CONSTANCE ANNE ARNOLD
E-83108
REGISTERED
PROFESSIONAL ENGINEER
4/30/20

This drawing contains information proprietary to The Reinforced Earth Company, and is being furnished for the use of The Ohio Department of Transportation only in connection with this project, and the information contained is not to be transmitted to any other organization unless specifically authorized in writing by The Reinforced Earth Company. The Reinforced Earth Company is the exclusive licensee in the United States under patents held by our affiliated companies, and the furnishing of this drawing does not constitute an expressed or implied license under any applicable patents.

The design contained on these drawings is based on information provided by the Owner. On the basis of this information, The Reinforced Earth Company has designed, and is responsible for the internal stability of the structure only. External stability, including foundation (bearing capacity and settlement) and global stability (including sliding and rotation), is the responsibility of the Owner.

REINFORCED EARTH®
45610 Woodland Rd., Suite 200, Sterling, VA 20166
"REINFORCED EARTH®" AND THE REINFORCED EARTH LOGO ARE REGISTERED TRADEMARKS OF THE REINFORCED EARTH COMPANY.

DESIGNED: MS	DRAWN: MS	REVIEWED: CA	DATE: 04/27/2020
CHECKED: CA	REVISED:	PID No: 96833	

GENERAL NOTES
CUY−IR490/SR010−2.09/19.28
CITY OF CLEVELAND, CUYAHOGA COUNTY, OHIO
OHIO DEPARTMENT OF TRANSPORTATION

CUY−IR490
SR010−2.09/19.28

18631

R:\RE18631_RLA_OH_CUY−IR 490\2nd Structure (2020−04−23) Rear Abut. At E. 89th St\Dwg\(2020−04−27) 18631 R. Abut. At E. 89th St. MSE Wall Design.dwg

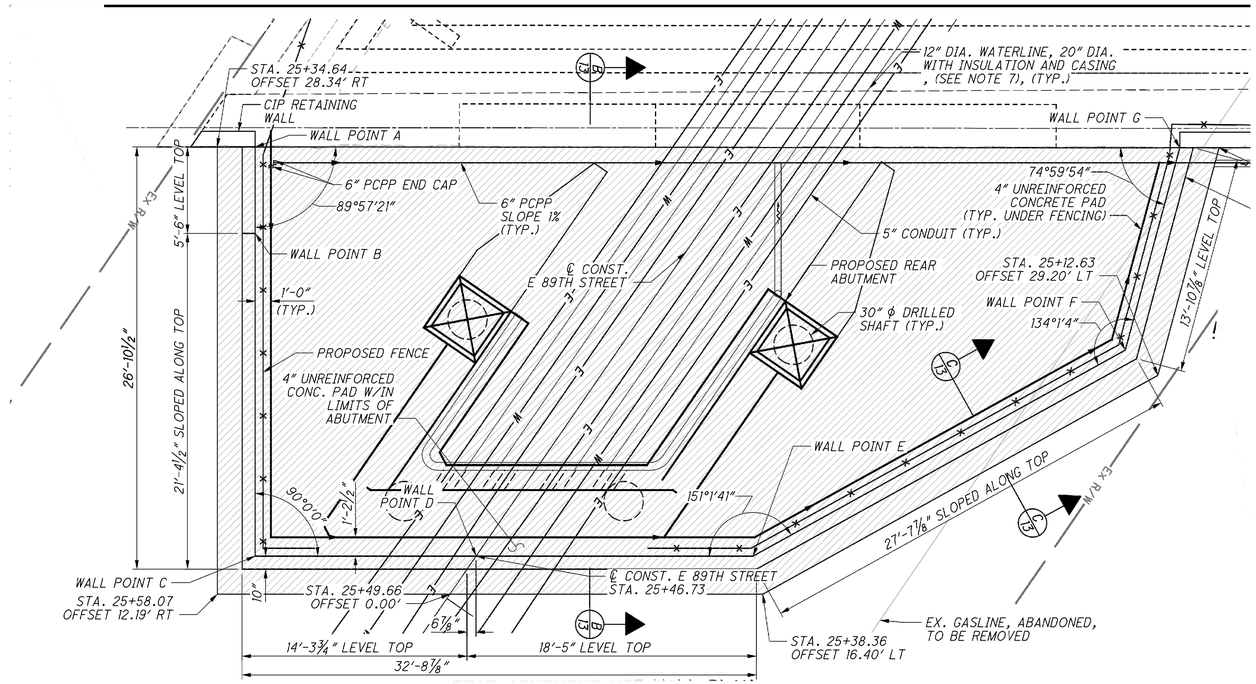

PLAN VIEW NOTE:

1. THE PLAN VIEW SHOWN ON THIS SHEET WERE COPIED FROM THE CONTRACT PLANS AND WERE ATTACHED ON THE REINFORCED EARTH COMPANY DRAWINGS FOR INFORMATION ONLY. THIS INFORMATION WAS DESIGNED, DETAILED, AND SEALED BY 2LMN, INC. THE REINFORCED EARTH COMPANY IS RESPONSIBLE FOR INTERNAL STABILITY OF THE STRUCTURE ONLY.

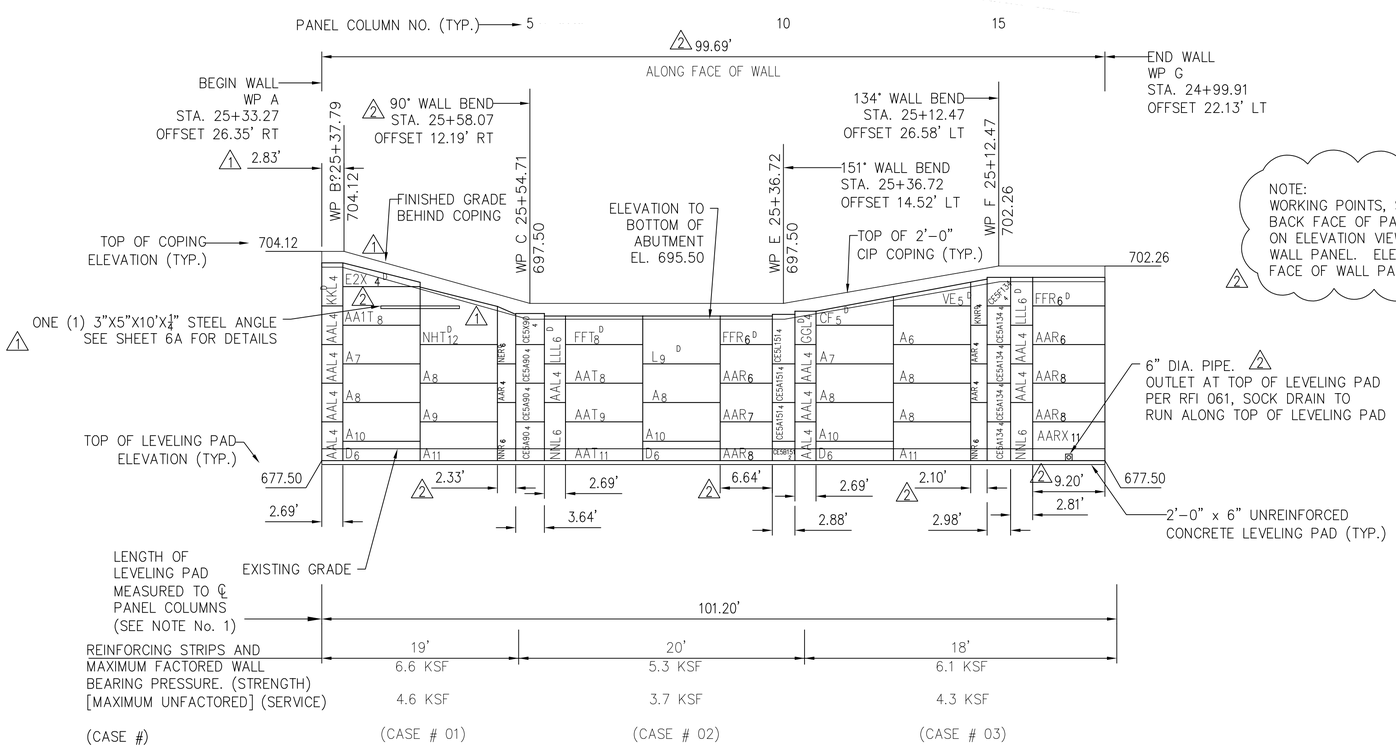

NOTE:
WORKING POINTS, STATIONS, AND OFFSETS ARE GIVEN TO BACK FACE OF PANELS. HOWEVER, DIMENSIONS SHOWN ON ELEVATION VIEW ARE GIVEN ALONG FRONT FACE OF WALL PANEL. ELEVATION VIEW ARE SHOWN TO FRONT FACE OF WALL PANEL. 2

NOTE:
FOR "M" AND "N" HEIGHT PANELS AT THE TOP OF A WALL, THE PANELS SHALL BE PLACED, CLAMPED AND BACKFILLED TO AT LEAST 10" ABOVE BOTTOM ROW OF TIE STRIPS EMBEDDED IN THE "M" OR "N" PANEL WITHIN THE SAME DAY. NO "M" OR "N" HEIGHT PANEL SHALL BE PLACED AND CLAMPED AND THEN LEFT OVERNIGHT WITHOUT ALSO PLACING AT LEAST 10" OF BACKFILL OVER THE BOTTOM ROW OF REINFORCING STRIPS. AS AN ALTERNATIVE TO THIS BACKFILL REQUIREMENT, THE "M" OR "N" PANEL MAY BE EXTERNALLY BRACED IN ADDITION TO BEING CLAMPED TO ADJACENT PANELS.

PANEL KEY:

AARX 6 D — COPING DOWEL

PANEL FORM SHAPE

REQUIRED PANEL CUT EDGE (R) = RIGHT SIDE (L) = LEFT SIDE

TYPE

NO. OF REQUIRED TIE STRIPS

NOTES

1. LENGTH OF LEVELING PAD IS BASED ON INDIVIDUAL PANEL WIDTHS FROM ℄ OF PANEL JOINT TO ℄ OF PANEL JOINT.
2. TOP OF WALL ELEVATIONS ARE SHOWN TO TOP OF COPING.
3. ALL DIMENSIONS ARE IN FEET UNLESS OTHERWISE NOTED.

CERTIFIED WITH RESPECT TO INTERNAL STABILITY OF REINFORCED EARTH STRUCTURES ONLY.

STATE OF OHIO
CONSTANCE ANNE ARNOLD
E-83108
REGISTERED
PROFESSIONAL ENGINEER
10/16/2020

ELEVATION VIEW – FRONT FACE
REAR ABUTMENT AT EAST 89TH ST.

2	10/15/20	REVISED PER ODOT COMMENT
1	6/4/20	REVISED PER 2LMN COMMENT

This drawing contains information proprietary to The Reinforced Earth Company, and is being furnished for the use of The Ohio Department of Transportation only in connection with this project, and the information contained is not to be transmitted to any other organization unless specifically authorized in writing by The Reinforced Earth Company. The Reinforced Earth Company is the exclusive licensee in the United States under patents held by our affiliated companies, and the furnishing of this drawing does not constitute an expressed or implied license under any applicable patents.

The design contained on these drawings is based on information provided by the Owner. On the basis of this information, The Reinforced Earth Company has designed, and is responsible for the internal stability of the structure only. External stability, including foundation (bearing capacity and settlement) and global stability (including sliding and rotation), is the responsibility of the Owner.

ReinforCed eARTH®
45610 Woodland Rd., Suite 200, Sterling, VA 20166
"REINFORCED EARTH®" AND THE REINFORCED EARTH LOGO ARE REGISTERED TRADEMARKS OF THE REINFORCED EARTH COMPANY.

REVIEWED: CA	DATE: 04/27/2020
	PID No: 96833
DRAWN: MS	
REVISED:	
DESIGNED: MS	
CHECKED: CA	

MSE PLAN & ELEVATION VIEW
CUY-IR490/SR010-2.09/19.28
CITY OF CLEVELAND, CUYAHOGA COUNTY, OHIO
OHIO DEPARTMENT OF TRANSPORTATION

CUY-IR490
SR010-2.09/19.28

18631

R:\RE18631_RLA_OH_CUY-IR 490\2nd Structure (2020-04-23) Rear Abut. At E. 89th St\Dwg\(2020-04-27) 18631 R. Abut. At E. 89th St. MSE Wall Design.dwg

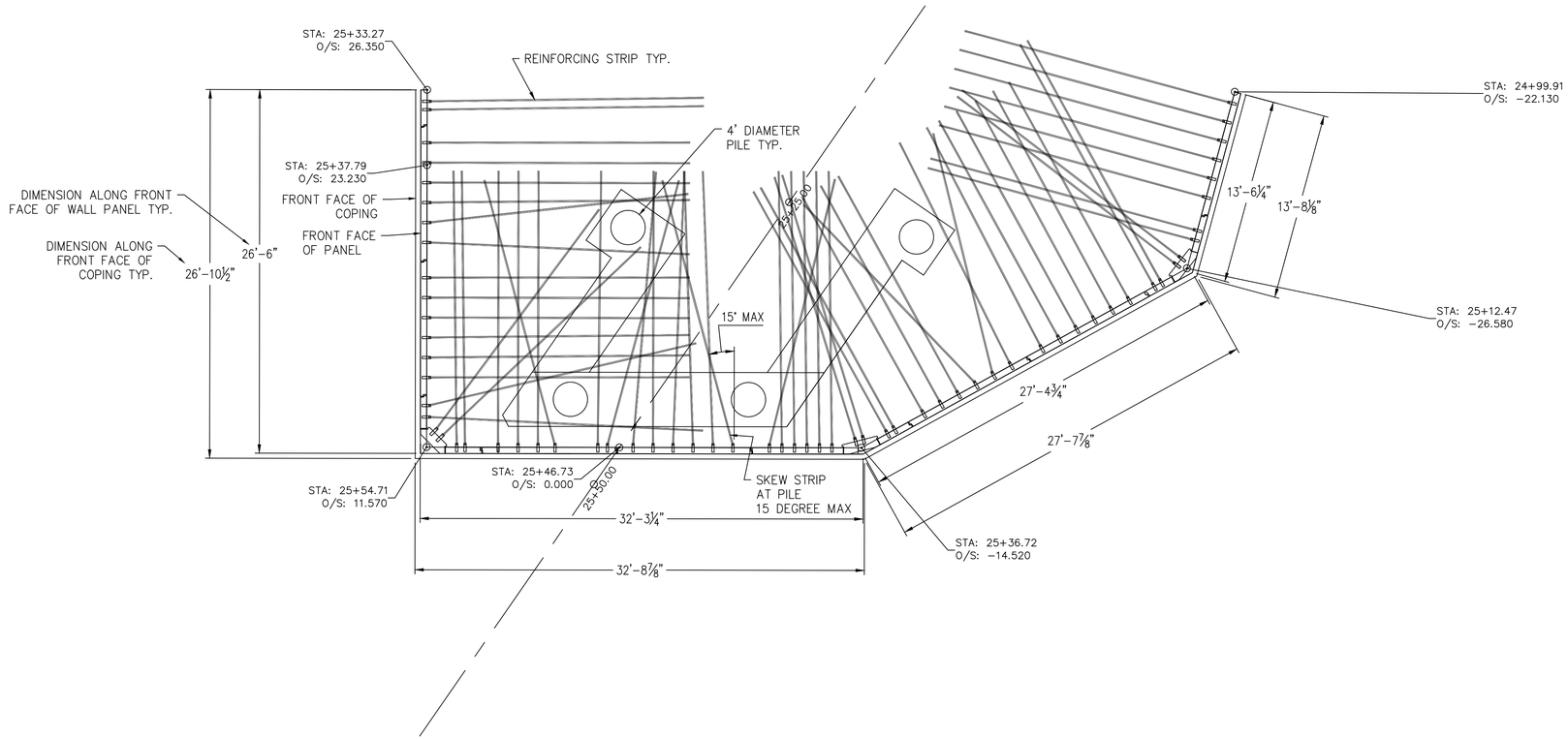

STRIP SKEW PLAN VIEW

SCALE: 1" = 10'

This drawing contains information proprietary to The Reinforced Earth Company, and is being furnished for the use of The Ohio Department of Transportation only in connection with this project, and the information contained is not to be transmitted to any other organization unless specifically authorized in writing by The Reinforced Earth Company. The Reinforced Earth Company is the exclusive licensee in the United States under patents held by our affiliated companies, and the furnishing of this drawing does not constitute an expressed or implied license under any applicable patents.

The design contained on these drawings is based on information provided by the Owner. On the basis of this information, The Reinforced Earth Company has designed, and is responsible for the internal stability of the structure only. External stability, including foundation (bearing capacity and settlement) and global stability (including sliding and rotation), is the responsibility of the Owner.

CERTIFIED WITH RESPECT TO INTERNAL STABILITY OF REINFORCED EARTH STRUCTURES ONLY.

STATE OF OHIO
CONSTANCE ANNE ARNOLD
E-83498
REGISTERED
PROFESSIONAL ENGINEER
10/16/2020

REINFORCED EARTH®
45610 Woodland Rd., Suite 200, Sterling, VA 20166
"REINFORCED EARTH®" AND THE REINFORCED EARTH LOGO ARE REGISTERED TRADEMARKS OF THE REINFORCED EARTH COMPANY.

DESIGNED: MS	DRAWN: MS	REVIEWED: CA	DATE: 04/27/2020
CHECKED: CA	REVISED:	PID No: 96833	

GENERAL NOTES
CUY-IR490/SR010-2.09/19.28
CITY OF CLEVELAND, CUYAHOGA COUNTY, OHIO
OHIO DEPARTMENT OF TRANSPORTATION

CUY-IR490
SR010-2.09/19.28

18631

R:\RE18631_RLA_OH_CUY-IR 490\2nd Structure (2020-04-23) Rear Abut. At E. 89th St\Dwg\(2020-04-27) 18631 R. Abut. At E. 89th St. MSE Wall Design.dwg

NEW ABUTMENT STRAP CONFIGURATION DUE TO CONFLICT WITH ABUTMENT WING WALLS - REVISED - 12/23/20

PLAN VIEW NOTE:

1. THE SECTION VIEWS SHOWN ON THIS SHEET WERE COPIED FROM THE CONTRACT PLANS AND WERE ATTACHED ON THE REINFORCED EARTH COMPANY DRAWINGS FOR INFORMATION ONLY. THIS INFORMATION WAS DESIGNED, DETAILED, AND SEALED BY 2LMN, INC. THE REINFORCED EARTH COMPANY IS RESPONSIBLE FOR INTERNAL STABILITY OF THE STRUCTURE ONLY.

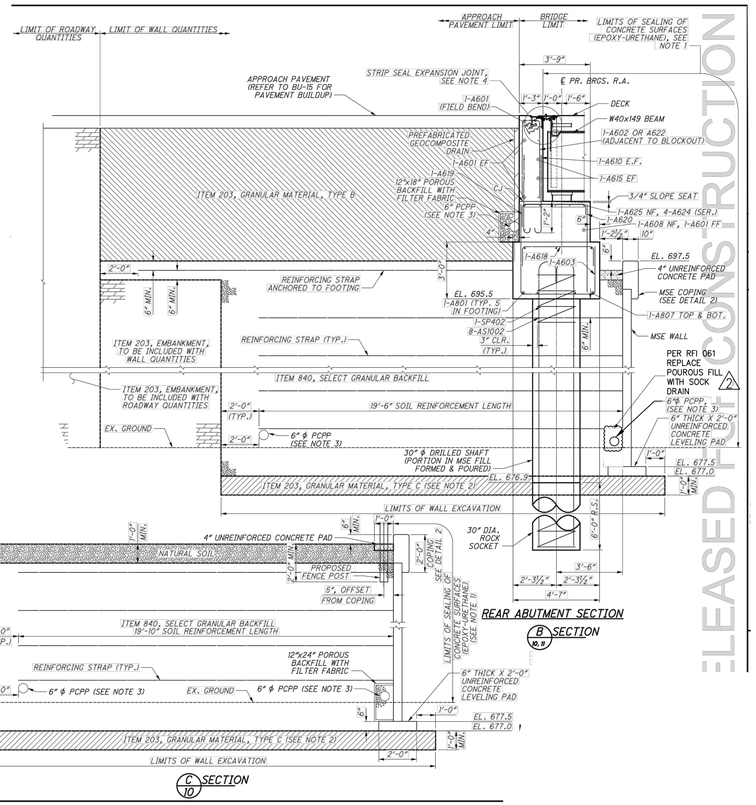

BACKWALL TIE STRIP AND REINFORCING STRIP CHART

WALL NAME	DISTANCE (FT.)	REINF. STRIP LENGTH (FT.)	HORIZONTAL SPACING	TIE STRIP QUANTITY PER LEVEL	TOTAL/ ABUT.	NOTE AND DIAGRAM
REAR	0.50	16	~12"	8	24	ABUTMENT BACKWALL STRIPS SPACING STRIP LENGTH AND QUANTITY.
	1.50	16	~12"	8		
	2.50	16	~12"	8		

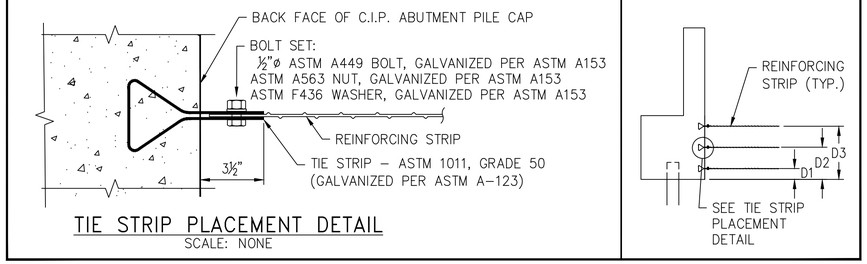

TIE STRIP PLACEMENT DETAIL

SCALE: NONE

NOTE:– THE FIRST AND LAST TIE STRIP SHALL BE PLACED 6" MIN. FROM EDGE OF BACKWALL.

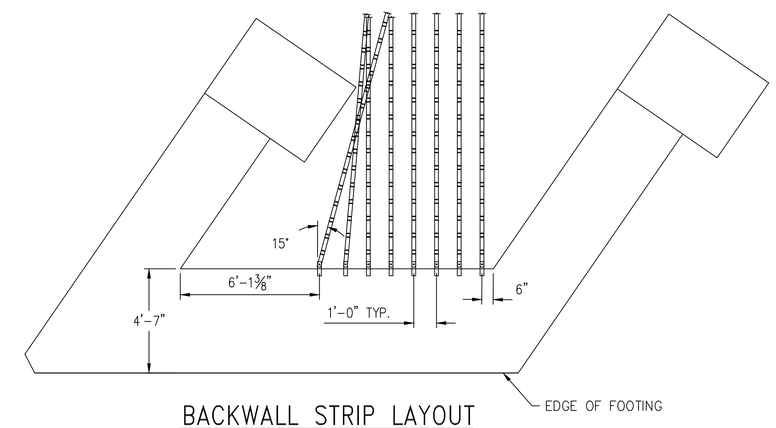

BACKWALL STRIP LAYOUT

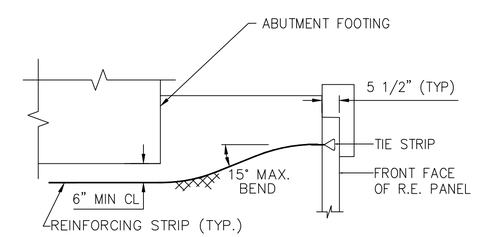

TYPICAL REINFORCING STRIP BENDING DETAIL

SCALE: 1/2" = 1'-0"

NOTE: DEFLECT STRIP GRADUALLY (15° MAX) WHERE REQUIRED TO ACHIEVE 6" MIN CLEARANCE FROM BOTTOM OF ABUTMENT

2	10/15/20	REVISED PER ODOT COMMENT

This drawing contains information proprietary to The Reinforced Earth Company, and is being furnished for the use of The Ohio Department of Transportation only in connection with this project, and the information contained is not to be transmitted to any other organization unless specifically authorized in writing by The Reinforced Earth Company. The Reinforced Earth Company is the exclusive licensee in the United States under patents held by our affiliated companies, and the furnishing of this drawing does not constitute an expressed or implied license under any applicable patents.

The design contained on these drawings is based on information provided by the Owner. On the basis of this information, The Reinforced Earth Company has designed, and is responsible for the internal stability of the structure only. External stability, including foundation (bearing capacity and settlement) and global stability (including sliding and rotation), is the responsibility of the Owner.

CERTIFIED WITH RESPECT TO INTERNAL STABILITY OF REINFORCED EARTH STRUCTURES ONLY.

STATE OF OHIO
CONSTANCE ANNE ARNOLD
E-83108
REGISTERED
PROFESSIONAL ENGINEER
12/23/20

REINFORCED EARTH®
45610 Woodland Rd., Suite 200, Sterling, VA 20166
"REINFORCED EARTH®" AND THE REINFORCED EARTH LOGO ARE REGISTERED TRADEMARKS OF THE REINFORCED EARTH COMPANY.

DESIGNED: MS	DRAWN: MS	REVIEWED: CA	DATE: 04/27/2020
CHECKED: CA	REVISED:		PID No: 96833

TYPICAL MSE SECTION(S) & DETAILS
CITY OF CLEVELAND, CUYAHOGA COUNTY, OHIO
OHIO DEPARTMENT OF TRANSPORTATION

CUY-IR490
SR010-2.09/19.28

18631

R:\RE18631_RLA_OH_CUY-IR 490\2nd Structure (2020-04-23) Rear Abut. At E. 89th St\Dwg\(2020-04-27) 18631 R. Abut. At E. 89th St. MSE Wall Design.dwg

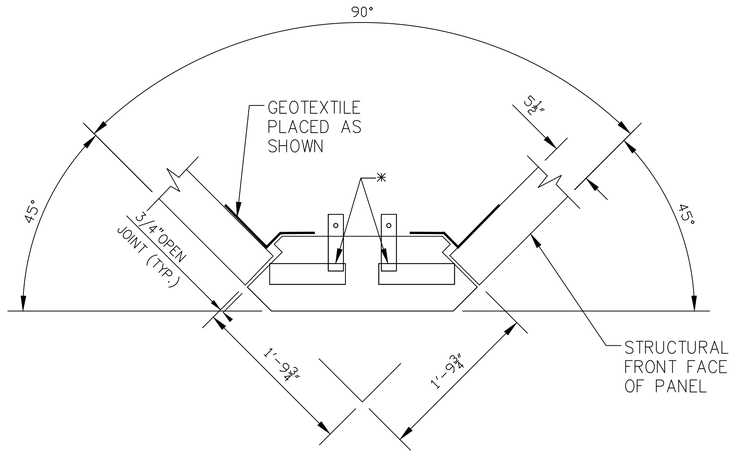

90° WALL BEND PLAN DETAIL

N.T.S

* NOTE: PLACE BEARING PADS AS SHOWN COLUMN 5 △2

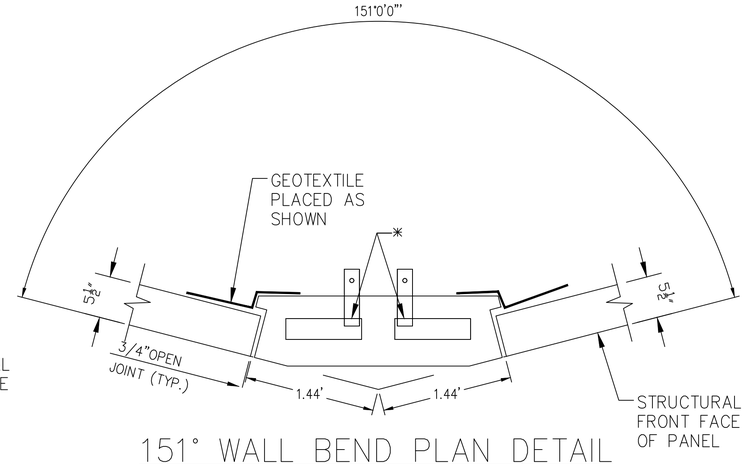

151° WALL BEND PLAN DETAIL

N.T.S

* NOTE: PLACE BEARING PADS AS SHOWN COLUMN 10

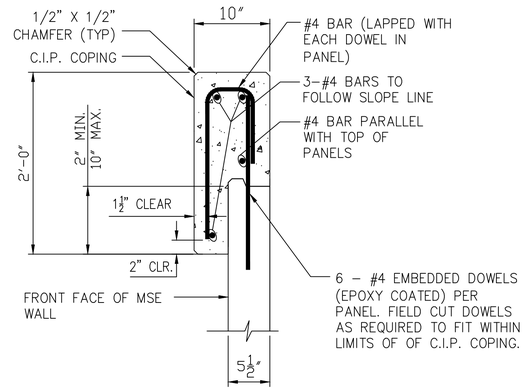

C.I.P. COPING DETAIL

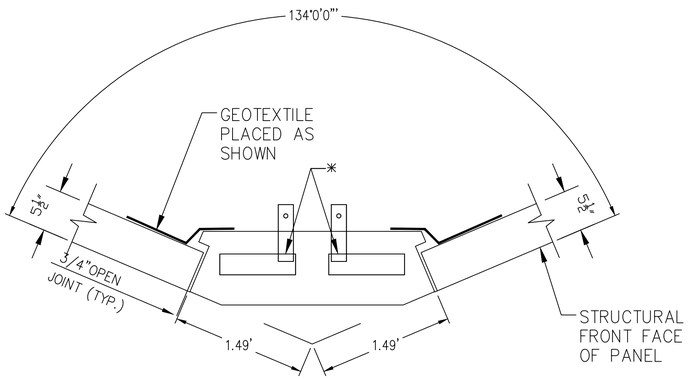

134° WALL BEND PLAN DETAIL

N.T.S

* NOTE: PLACE BEARING PADS AS SHOWN COLUMN 15

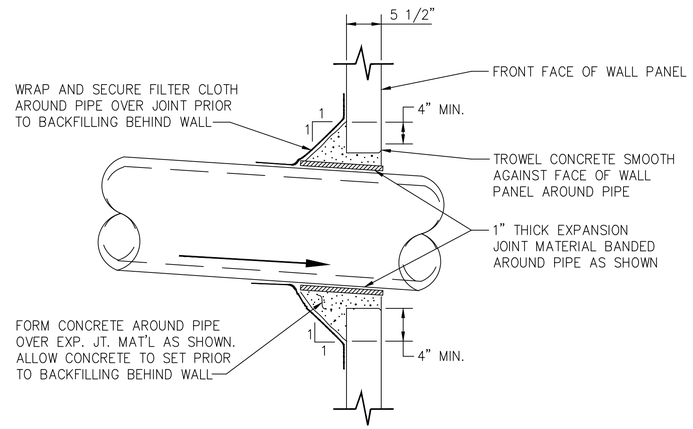

△2 PIPE PENETRATION AT WALL FACE DETAIL

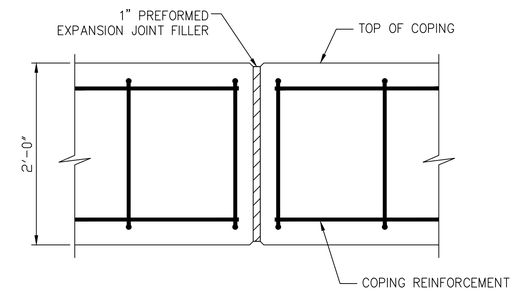

COPING EXPANSION JOINT – ELEVATION

COPING JOINTS SHALL ALIGN WITH JOINTS BETWEEN MSE WALL PANELS. COPING JOINTS SHALL NOT BE LOCATED MORE THAN 20 FEET APART. THE CONTRACTOR SHALL COORDINATE JOINT LAYOUT WITH DETAILS OF ACTUAL PROPRIETARY WALL CONSTRUCTED. △2

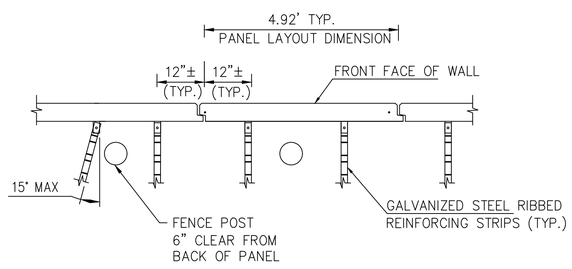

FENCE POST BEHIND WALL

SCALE 1/2" = 1'-0"

NOTE:
PRIOR TO PLACING FENCE POST FOUNDATIONS, CONTRACTOR SHALL MARK LOCATION ON BACK-FACE OF WALL AND SKEW REINFORCING STRIPS TO AVOID THE OBSTRUCTION. OR PLACE SONOTUBE/PVC PIPE FOR FUTURE GUIDERAIL PLACEMENT, SUCH THAT PLACEMENT OF REINFORCING STRIPS IS NOT OBSTRUCTED.
IT IS THE CONTRACTOR'S RESPONSIBILITY TO DETERMINE THE LOCATION OF FENCE POSTS BEHIND THE REINFORCED EARTH PANELS PRIOR TO PLACEMENT OF THE TOP TWO LEVELS OF REINFORCING STRIPS. ANY DAMAGE DONE TO THE REINFORCING STRIPS DUE TO THE INSTALLATION OF FENCE POSTS SHALL BE REPAIRED BY THE CONTRACTOR AT THE CONTRACTOR'S EXPENSE.

SCALE: 1" = 1'-0"

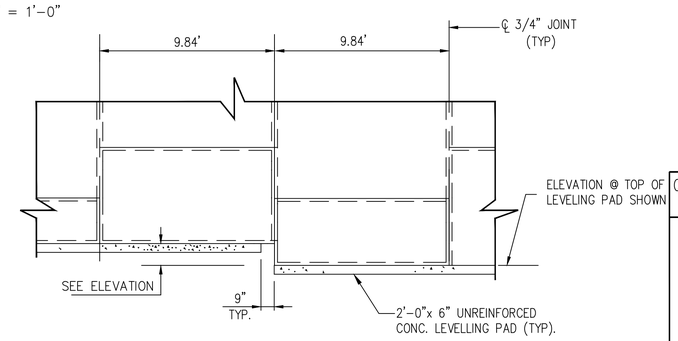

TYPICAL LEVELING PAD STEP DETAIL

△2	10/15/20	REVISED PER ODOT COMMENT

This drawing contains information proprietary to The Reinforced Earth Company, and is being furnished for the use of The Ohio Department of Transportation only in connection with this project, and the information contained is not to be transmitted to any other organization unless specifically authorized in writing by The Reinforced Earth Company. The Reinforced Earth Company is the exclusive licensee in the United States under patents held by our affiliated companies, and the furnishing of this drawing does not constitute an expressed or implied license under any applicable patents.

The design contained on these drawings is based on information provided by the Owner. On the basis of this information, The Reinforced Earth Company has designed, and is responsible for the internal stability of the structure only. External stability, including foundation (bearing capacity and settlement) and global stability (including sliding and rotation), is the responsibility of the Owner.

CERTIFIED WITH RESPECT TO INTERNAL STABILITY OF REINFORCED EARTH STRUCTURES ONLY.

STATE OF OHIO
CONSTANCE ANNE ARNOLD
E-83498
REGISTERED
PROFESSIONAL ENGINEER
10/16/2020

REINFORCED EARTH®
45610 Woodland Rd., Suite 200, Sterling, VA 20166
"REINFORCED EARTH®" AND THE REINFORCED EARTH LOGO ARE REGISTERED TRADEMARKS OF THE REINFORCED EARTH COMPANY.

DESIGNED: MS	DRAWN: MS	REVIEWED: CA	DATE: 04/27/2020
CHECKED: CA	REVISED:	PID No: 96833	

TYPICAL MSE SECTION(S) & DETAILS
CITY OF CLEVELAND, CUYAHOGA COUNTY, OHIO
OHIO DEPARTMENT OF TRANSPORTATION

CUY-IR490
SR010-2.09/19.28

18631

R:\RE18631_RLA_OH_CUY-IR 490\2nd Structure (2020-04-23) Rear Abut. At E. 89th St\Dwg\(2020-04-27) 18631 R. Abut. At E. 89th St. MSE Wall Design.dwg

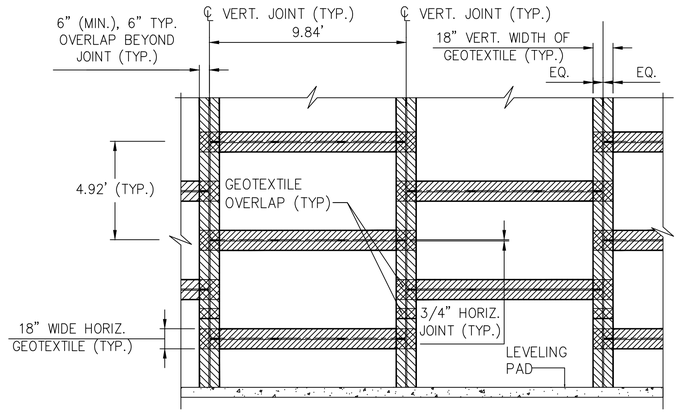

GEOTEXTILE PLACEMENT DETAIL
BACK FACE – RECTANGULAR PANELS

PROPER INSTALLATION OF GEOTEXTILE AT PANEL JOINTS IS IMPERATIVE IN PREVENTING LOSS OF BACKFILL MATERIAL.

GEOTEXTILE PLACEMENT RECOMMENDATIONS:

- PANEL GEOTEXTILE SHALL BE FIRMLY AFFIXED TO BACK OF PANEL AS SHOWN USING ADHESIVE SUPPLIED BY THE REINFORCED EARTH CO. APPLY ADHESIVE ON BACK FACE OF PANELS AND NOT ON GEOTEXTILE. DO NOT APPLY ADHESIVE WITHIN 2" OF PANEL JOINTS.
- PANEL GEOTEXTILE SHALL BE APPROXIMATELY CENTERED ON JOINTS.
- PANEL GEOTEXTILE SHALL HAVE A 12" MIN. OVERLAP. VERTICAL GEOTEXTILE SHALL OVERLAP HORIZONTAL GEOTEXTILE. WHEN TWO VERTICAL GEOTEXTILES OVERLAP, THE UPPER PIECE SHALL OVERLAP THE LOWER. PANEL GEOTEXTILE IS NOT REQUIRED AT THE INTERFACE BETWEEN PANEL AND LEVELING PAD UNLESS OTHERWISE NOTED IN THE DESIGN DRAWINGS.

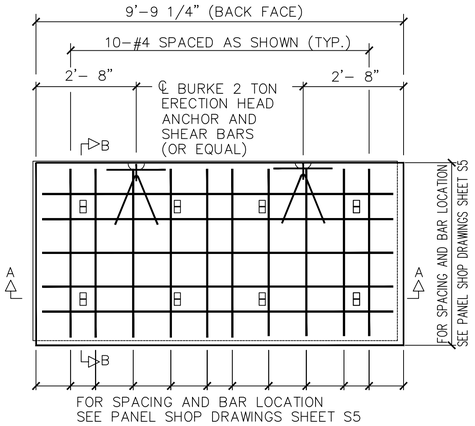

ELEVATION – BACK FACE

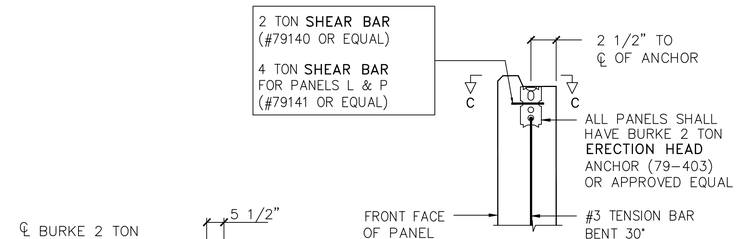

SECTION D–D
ERECTION HEAD
SCALE 3"=1'

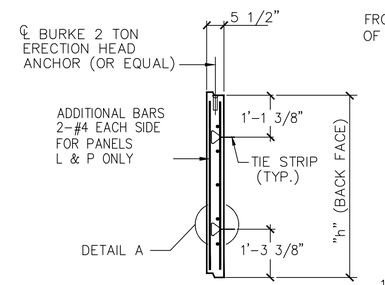

SECTION B–B

PANEL TYPE	"h"
A	4'-10 1/4"
C	1'-9 1/2"
D	2'-4 3/4"
E	3'- 0 1/4"
F	3'-7 1/2"
G	4'-3"
K	5'-5 3/4"
L/P	6'-1"

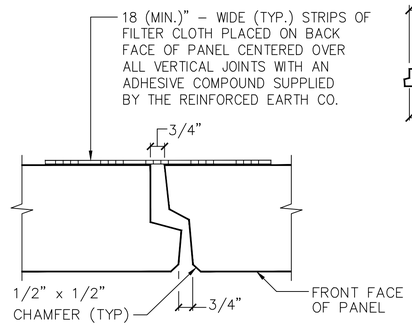

SECTION D–D
VERTICAL JOINT
SCALE: 3"=1'-0"

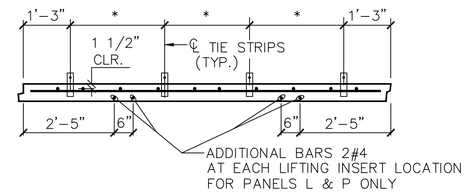

* FOR TIE STRIP SPACING SEE PANEL SHOP DRAWINGS SHEET S3

SECTION A–A
SCALE: 1/2" = 1'-0"

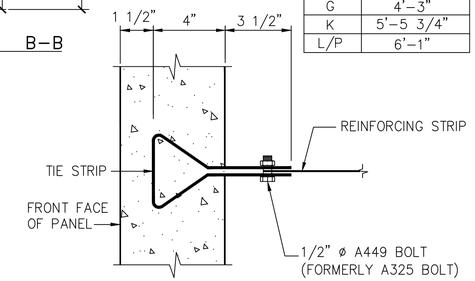

DETAIL A
TIE STRIP
EMBEDED IN PANEL
SCALE: 3"=1'-0"

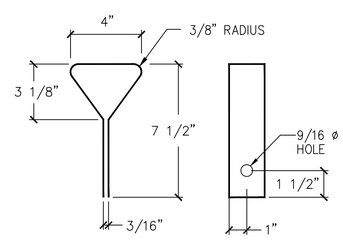

TIE STRIP DETAIL
SCALE: 3"=1'-0"

NOTES:

1. REINFORCING STEEL TO BE ASTM 615, GRADE 60, EPOXY COATED PER ASTM A 775. (2)
2. ALL PANEL TYPES AND OTHER RELATED ELEMENTS WILL BE DETAILED ON SHOP DRAWINGS.
3. ALL PANELS SHALL HAVE TWO LIFTING INSERTS OF MINIMUM TWO TON CAPACITY EACH.
4. PANEL DESIGN THICKNESS IS 5 1/2" THICKNESS OF CONCRETE.
5. CONCRETE COVER OVER ALL REINFORCEMENT TO BE 1 1/2" MINIMUM.

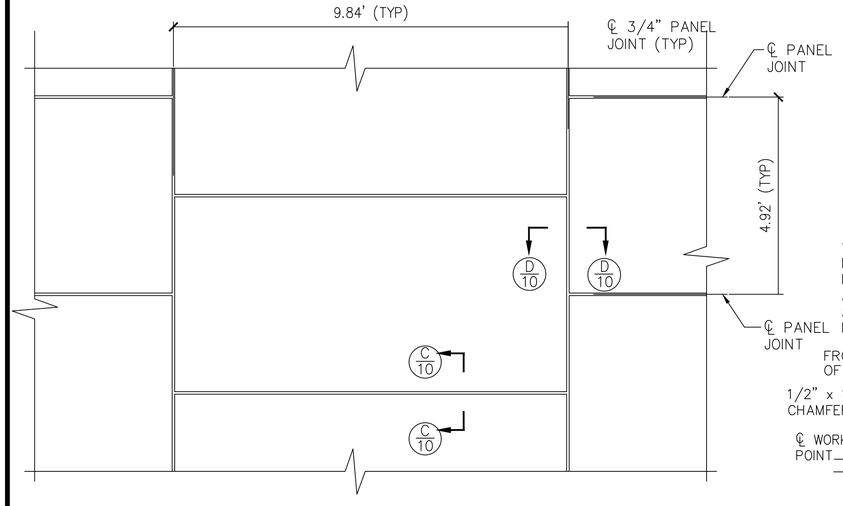

TYPICAL PANEL LAYOUT
PARTIAL ELEVATION – FRONT FACE
RECTANGULAR LARGE PANELS
NOT TO SCALE

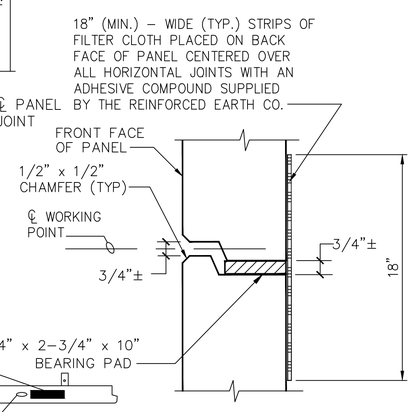

SECTION C–C
HORIZONTAL JOINT
SCALE: 3"=1'-0"

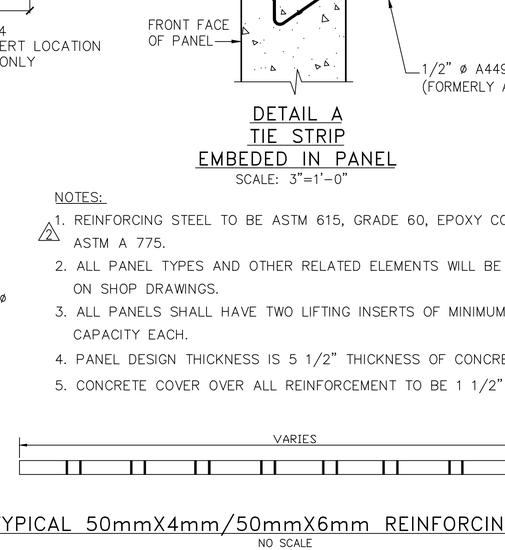

TYPICAL 50mmX4mm/50mmX6mm REINFORCING STRIP
NO SCALE

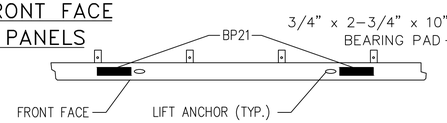

DETAIL 'A'
(2 PADS PER HORIZONTAL JOINT)

PANEL THICKNESS	REINFORCEMENT DESIGNATION	PANEL REINFORCEMENT (FOR PANEL TYPE "A")	MAXIMUM FACTORED HORIZONTAL STRESS AT BACK FACE OF PANEL (KSF)
5 1/2" (MIN.)	R4	10-#4 VERTICAL 5-#4 HORIZONTAL	3.50

CERTIFIED WITH RESPECT TO INTERNAL STABILITY OF REINFORCED EARTH STRUCTURES ONLY.

STATE OF OHIO
CONSTANCE ANNE ARNOLD
E-83168
REGISTERED
PROFESSIONAL ENGINEER
10/16/2020

2	10/15/20	REVISED PER ODOT COMMENT

This drawing contains information proprietary to The Reinforced Earth Company, and is being furnished for the use of The Ohio Department of Transportation only in connection with this project, and the information contained is not to be transmitted to any other organization unless specifically authorized in writing by The Reinforced Earth Company. The Reinforced Earth Company is the exclusive licensee in the United States under patents held by our affiliated companies, and the furnishing of this drawing does not constitute an expressed or implied license under any applicable patents.

The design contained on these drawings is based on information provided by the Owner. On the basis of this information, The Reinforced Earth Company has designed, and is responsible for the internal stability of the structure only. External stability, including foundation (bearing capacity and settlement) and global stability (including sliding and rotation), is the responsibility of the Owner.

ReinforcedEarth®
45610 Woodland Rd., Suite 200, Sterling, VA 20166
"REINFORCED EARTH®" AND THE REINFORCED EARTH LOGO ARE REGISTERED TRADEMARKS OF THE REINFORCED EARTH COMPANY.

DATE: 04/27/2020
REVIEWED: CA
PID No: 96833
DRAWN: MS
REVISED:
DESIGNED: MS
CHECKED: CA

STANDARD PANEL DETAILS
CUY-IR490/SR010-2.09/19.28
CITY OF CLEVELAND, CUYAHOGA COUNTY, OHIO
OHIO DEPARTMENT OF TRANSPORTATION

CUY-IR490
SR010-2.09/19.28

18631

R:\RE18631_RLA_OH_CUY-IR 490\2nd Structure (2020-04-23) Rear Abut. At E. 89th St\Dwg\(2020-04-27) 18631 R. Abut. At E. 89th St. MSE Wall Design.dwg

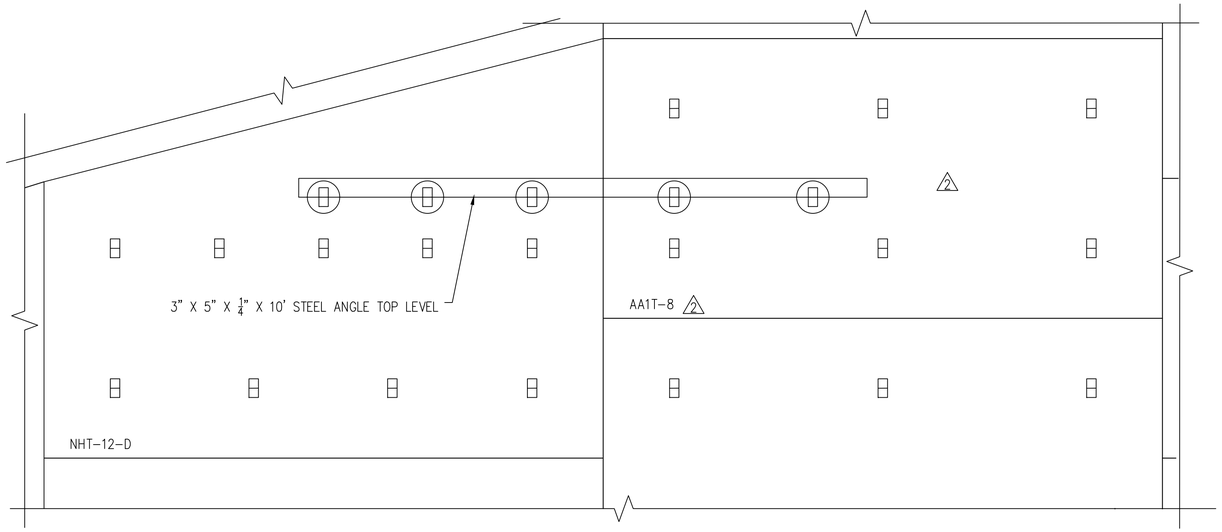

PARTIAL ELEVATION – STEEL ANGLE AT TOP STRIP LEVEL COLUMN 3

SCALE: ¾" = 1'-0"

TIE STRIP WITH NO REINFORCING STRIP CONNECTED

TIE STRIP WITH REINFORCING STRIP CONNECTED

IMPORTANT NOTE: ONLY THE TIE STRIP LEVEL AT THE ANGLE DOES NOT HAVE REINFORCING STRIPS ATTACHED. CONTRACTOR SHALL ATTACH REINFORCING STRIP TO TIE STRIP AT ALL OTHER LOCATION.

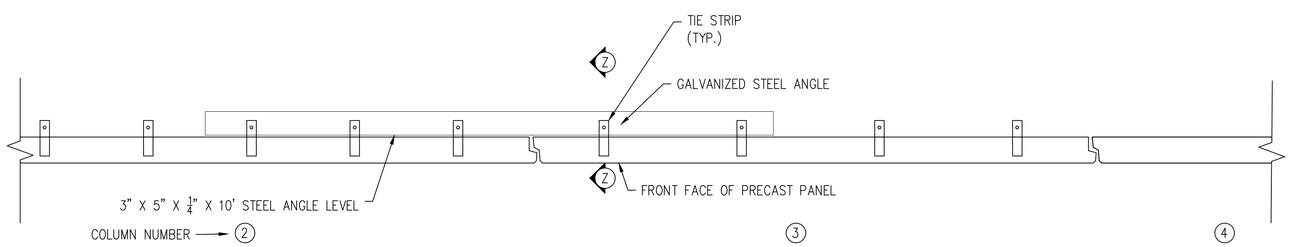

PARTIAL PLAN – STEEL ANGLE AT TOP STRIP LEVEL COLUMN 3

SCALE: ¾" = 1'-0"

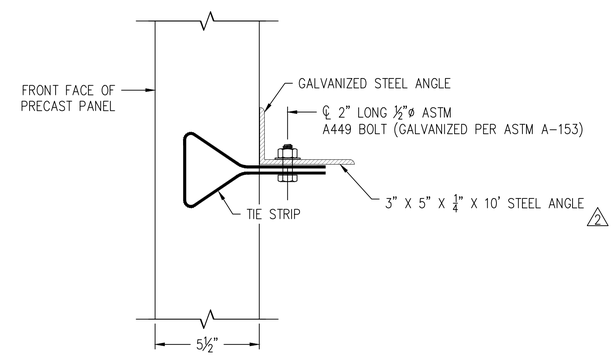

SECTION Z-Z (ANGLE BOLTED TO TIE STRIP WITHOUT REINFORCING STRIP)

SCALE: 3" = 1'-0"

NOTES:
1. DETAIL SHOWN SCHEMATICALLY, FIELD CONDITIONS MAY VARY.

NOTE: ARCHITECTURAL FINISH NOT SHOWN IN ABOVE SECTIONS AND PLAN

△2	10/15/20	REVISED PER ODOT COMMENT
△1	6/4/20	REVISED PER 2LMN COMMENT

This drawing contains information proprietary to The Reinforced Earth Company, and is being furnished for the use of The Ohio Department of Transportation only in connection with this project, and the information contained is not to be transmitted to any other organization unless specifically authorized in writing by The Reinforced Earth Company. The Reinforced Earth Company is the exclusive licensee in the United States under patents held by our affiliated companies, and the furnishing of this drawing does not constitute an expressed or implied license under any applicable patents.

The design contained on these drawings is based on information provided by the Owner. On the basis of this information, The Reinforced Earth Company has designed, and is responsible for the internal stability of the structure only. External stability, including foundation (bearing capacity and settlement) and global stability (including sliding and rotation), is the responsibility of the Owner.

CERTIFIED WITH RESPECT TO INTERNAL STABILITY OF REINFORCED EARTH STRUCTURES ONLY.

STATE OF OHIO
CONSTANCE ANNE ARNOLD
E-83188
REGISTERED
PROFESSIONAL ENGINEER
10/16/2020

REINFORCED EARTH®
45610 Woodland Rd., Suite 200, Sterling, VA 20166
®REINFORCED EARTH® AND THE REINFORCED EARTH LOGO ARE REGISTERED TRADEMARKS OF THE REINFORCED EARTH COMPANY.

DATE: 04/27/2020	
REVIEWED: CA	PID No: 96833
DRAWN: MS	REVISED:
DESIGNED: MS	CHECKED: CA

ANGLE DETAILS
CUY-IR490/SR010-2.09/19.28
CITY OF CLEVELAND, CUYAHOGA COUNTY, OHIO
OHIO DEPARTMENT OF TRANSPORTATION

CUY-IR490
SR010-2.09/19.28

06A OF 6

18631

R:\RE18631_RLA_OH_CUY-IR 490\2nd Structure (2020-04-23) Rear Abut. At E. 89th St\Dwg\ANGLE DETAILS.dwg